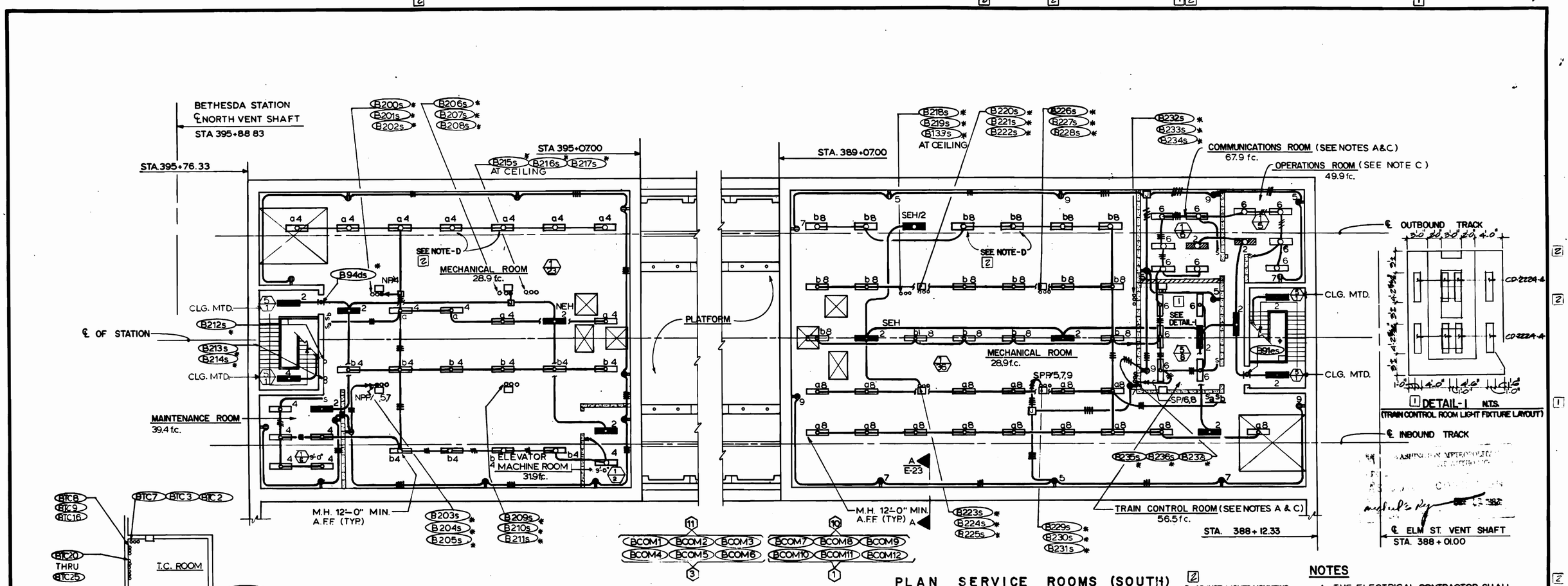

PLAN SERVICE ROOMS (NORTH)

EXISTING CONDUIT STUB-OUT CEILING PLAN
NOT TO SCALE

SECTION A-A TYPICAL RECEPTACLE INSTALLATION
NOT TO SCALE
(E-23 EXTERIOR WALLS MEZZANINE)

PLAN SERVICE ROOMS (SOUTH)

EXISTING CONDUIT STUB-OUT FLOOR PLAN
SCALE: 1/4"=1'-0" (E-24)

D. ADJUST LIGHTS MOUNTING HEIGHTS AS REQUIRED NEXT TO ACU'S, AND VU'S.

NOTES

A. THE ELECTRICAL CONTRACTOR SHALL COORDINATE THE EXACT LOCATIONS OF LIGHTING FIXTURES WITH THE STAGE CONTRACTORS FOR "COMMUNICATION" AND TRAIN CONTROL CONTRACTS AS APPROPRIATE.

B. ALL SLEEVES LOCATED IN FLOOR SLAB U.O.N. FOR CONTINUATION, SEE DWG. E-16.

C. LIGHTING FIXTURE GENERALLY MTD. 12'-0" A.F.F. COORDINATE INSTALLATION WITH MECH. EQUIP.

		DATE
DESIGNED	P.S. GHU	1-3-75
DRAWN	C.J. REID	1-3-75
CHECKED	H.B. ZACKRISON	6-16-80
APPROVED	H.B. ZACKRISON	6-16-80

REFERENCE DRAWINGS

NUMBER	DESCRIPTION
S-102	SERVICE AREAS N & S STAIRS
A-4	FUNCTIONAL PLANS - MEZZ. & PLATF. LEVEL
A-24	ANCIL. SPACES - MEZZ. & PLATF. LEVEL
M-14	S ANCIL. AREA UPPER LEVEL PLAN
M-17	N ANCIL. AREA UPPER LEVEL PLAN

REVISIONS

DATE	BY		DESCRIPTION
7-6-83	MD	1	REV. PER PCO. 70, AS-BUILT
		2	REV. PER FIELD COND., AS-BUILT

WASHINGTON METROPOLITAN AREA TRANSIT AUTHORITY

MATHEWS • CHATELAIN • BEALL
ENGINEERS AND ARCHITECTS
SECTION DESIGNER

SUBMITTED Jerrily R. Grass DATE 8-15-80

DE LEUW, CATHER & COMPANY
GENERAL ENGINEERING CONSULTANT

HARRY WEESE & ASSOCIATES
GENERAL ARCHITECTURAL CONSULTANT

APPROVED Gary F. Hart

ROCKVILLE ROUTE
BETHESDA STATION - MEZZANINE LEVEL
N & S ANCILLARY SPACES - LIGHTING & RECEPT.

SCALE 1/8"=1'-0"
DRAWING NO. FA11-E-23
M334-171

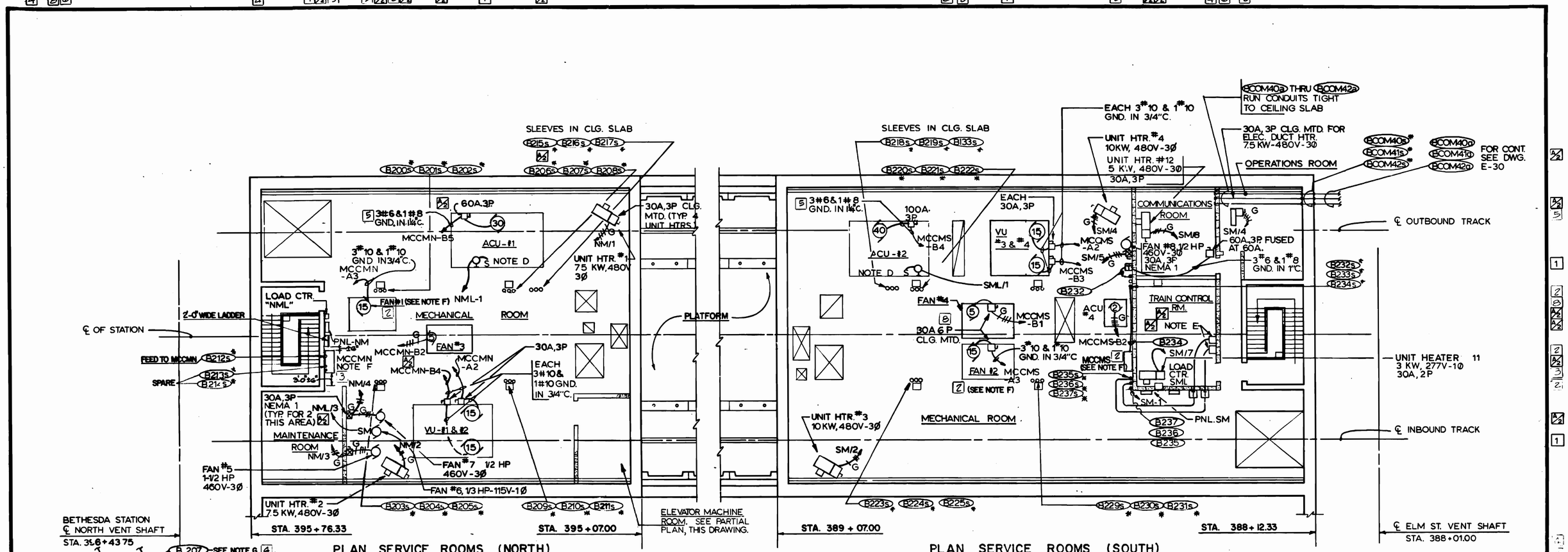

NOTES

A. SEE DWG. E-23 FOR EXISTING CONDUIT STUB-OUT PLANS OF COMM. RM. & TRAIN CONTROL RM.

B. FOR RECEPTACLES LAYOUT, SEE DWG. E-23.

C. ALL SLEEVES LOCATED IN FLOOR SLAB U.O.N. FOR CONTINUATION, SEE DWG. E-17.

D. LOCATE LIGHT FIXTURES (TYPE "6D") & SWITCHES WITHIN A.C.U. AND V.U. AS DIRECTED BY MECH. CONTRACTOR.

E. 100A FRAME, 100A TRIP CKT. BKR. IN NEMA 12 ENCLOSURE.

F. MCCMN FEEDER B212 ENTERS VIA SLEEVE LOCATED BELOW MOTOR CONTROL CENTER. FOR B212s CONT. SEE DWG. E-17. PROVIDE REVERSIBLE STARTERS FOR F1 + F2 IN MCC.

4 G. MISC. ELEC. CHANGES – REVISE CONDUIT RUNS B207, B208 FROM 3" TO 1" CONDUITS.

6 H. RELOCATE LIGHT SWITCH, MAIN POWER DISCONNECT TO THE LOCK JAMB SIDE OF THE DOOR.

	#	8	REV. PER FIELD COND., AS-BUILT
	#	7	REV. PER PCO. 87, AS-BUILT
	#	6	REV. PER PCO. 81, AS-BUILT
	#	5	REV. PER PCO. 79, AS-BUILT

		DATE
DESIGNED	P. S. CHU	1-3-75
DRAWN	C. J. REID	1-3-75
CHECKED	H.B. ZACKRISON	6-16-80
APPROVED	H.B. ZACKRISON	6-16-80

REFERENCE DRAWINGS

NUMBER	DESCRIPTION
S-102	SERVICE AREAS NORTH AND SOUTH STAIRS
A-24	ANCILLARY SPACES - MEZZANINE LEVEL
M-14	SOUTH ANCILLARY AREA UPPER LEVEL
M-17	NORTH ANCILLARY AREA UPPER LEVEL

REVISIONS

DATE	BY		DESCRIPTION
9-25-80	H.Z.		GENERAL REVISION
			REVISED COMM. & T.C. ROOMS
	H.B.Z.		PCO #42
7-7-83	MD	2	REV. PER PCO. 4, AS-BUILT
	#	3	REV. PER PCO. 71, AS-BUILT
	#	4	REV. PER PCO. 78, AS-BUILT

3888-R

WASHINGTON METROPOLITAN AREA TRANSIT AUTHORITY

MATHEWS • CHATELAIN • BEALL
ENGINEERS AND ARCHITECTS
SECTION DESIGNER

SUBMITTED Stanley G. Stokes DATE 8-15-80

DE LEUW, CATHER & COMPANY
GENERAL ENGINEERING CONSULTANT

HARRY WEESE & ASSOCIATES
GENERAL ARCHITECTURAL CONSULTANT

APPROVED

ROCKVILLE ROUTE

BETHESDA STATION – MEZZANINE LEVEL

NORTH & SOUTH ANCILLARY SPACES – POWER

SCALE 1/8" = 1'-0" 0 2 4 6 8 10

DRAWING NO. FA11-E-24

M334-172

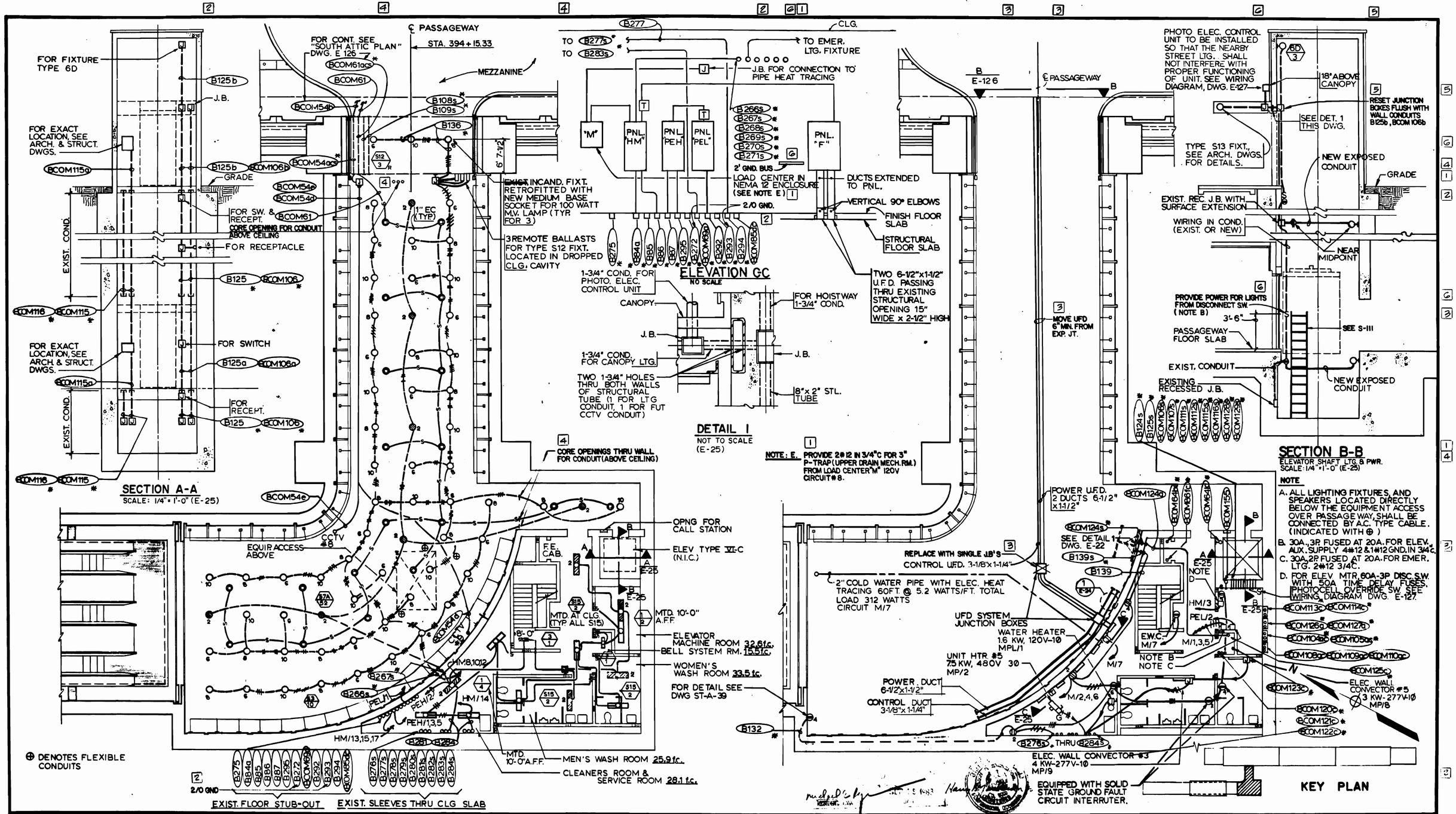

DESIGNED	P. S. CHU / B. STAUFFER	11-28-74 DATE
DRAWN	ELENA ROCHA	11-28-74 DATE
CHECKED	H.B. ZACKRISON	8-16-80 DATE
APPROVED	H.B. ZACKRISON	8-16-80 DATE

REFERENCE DRAWINGS		
NUMBER	DESCRIPTION	
A-4	FUNCTIONAL PLANS - MEZZ. & PLATF. LEVEL	
A-31	PASSAGEWAY - ANCIL. PLAN	
M-28	PASSAGEWAY AREA PLAN & SECTION	
M-29	PLUMBING 1/4" SCALE PLANS	

REVISIONS			
DATE	BY		DESCRIPTION
7-7-83	MD	1	REV. PER PCO. 7, AS-BUILT
		2	REV. PER PCO. 10, AS-BUILT
		3	REV. PER PCO. 29, AS-BUILT
		4	REV. PER PCO. 31, AS-BUILT
		5	REV. PER PCO. 81, AS-BUILT
		6	REV. PER FIELD COND., AS-BUILT

WASHINGTON METROPOLITAN AREA TRANSIT AUTHORITY

MATHEWS • CHATELAIN • BEALL
ENGINEERS AND ARCHITECTS
SECTION DESIGNER

SUBMITTED _____ DATE 8-16-80

DE LEUW, CATHER & COMPANY
GENERAL ENGINEERING CONSULTANT

HARRY WEESE & ASSOCIATES
GENERAL ARCHITECTURAL CONSULTANT

APPROVED _____

ROCKVILLE ROUTE
BETHESDA STATION
PASSAGEWAY & ANCILLARY SPACES - LIGHTING & POWER

SCALE 1/8" = 1'-0" (0 2 4 6 8 10) AND AS NOTED

DRAWING NO FA11-E-25

M334-173

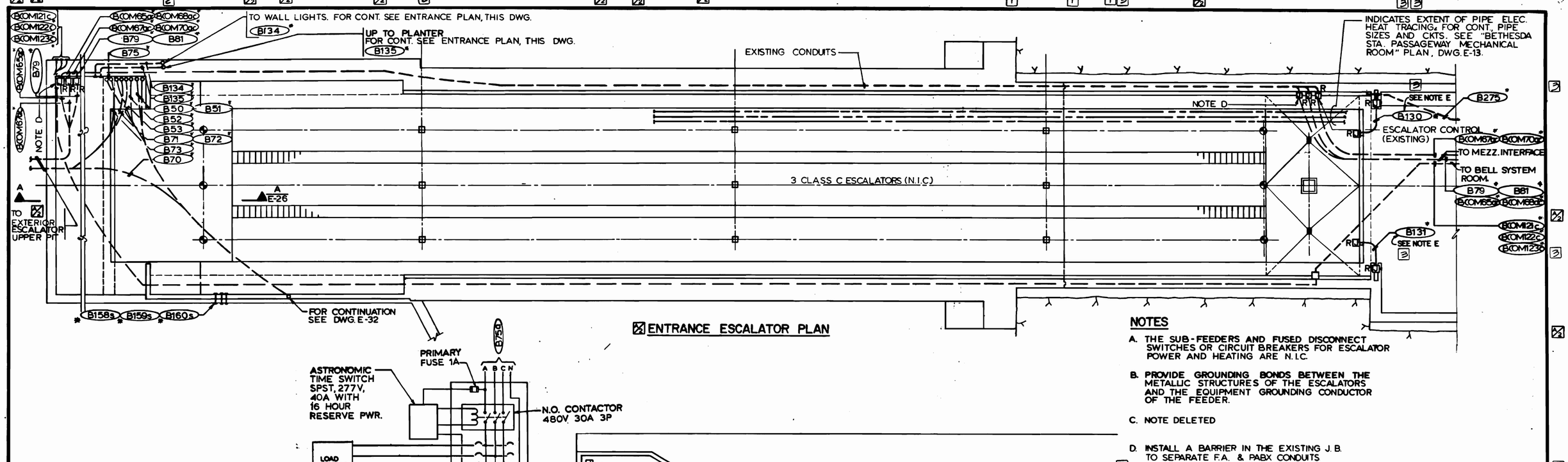

ENTRANCE ESCALATOR PLAN

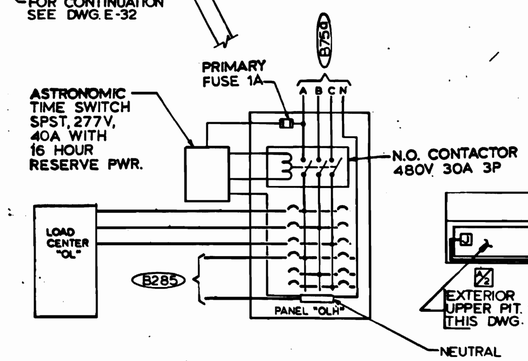

SITE LIGHTING CONTROL DIAGRAM
NOT TO SCALE (E-33)

NOTES

A. THE SUB-FEEDERS AND FUSED DISCONNECT SWITCHES OR CIRCUIT BREAKERS FOR ESCALATOR POWER AND HEATING ARE N.I.C.

B. PROVIDE GROUNDING BONDS BETWEEN THE METALLIC STRUCTURES OF THE ESCALATORS AND THE EQUIPMENT GROUNDING CONDUCTOR OF THE FEEDER.

C. NOTE DELETED

D. INSTALL A BARRIER IN THE EXISTING J.B. TO SEPARATE F.A. & PABX CONDUITS

E. INSTALL LIMIT SWITCHES + RUN #12 TO RECESSED J.B. IN ESCALATOR PIT.

F. WALL MOUNTED 30 KVA, 480V-208/Y TRANSFORMER.

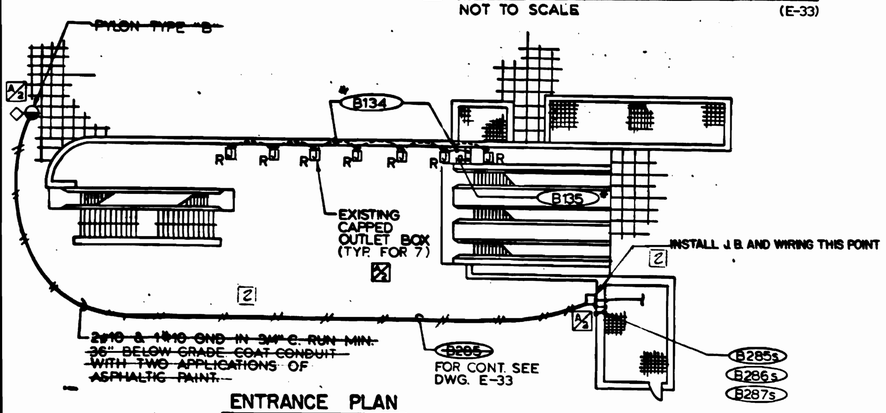

ENTRANCE PLAN
SCALE: 1" = 10'-0"

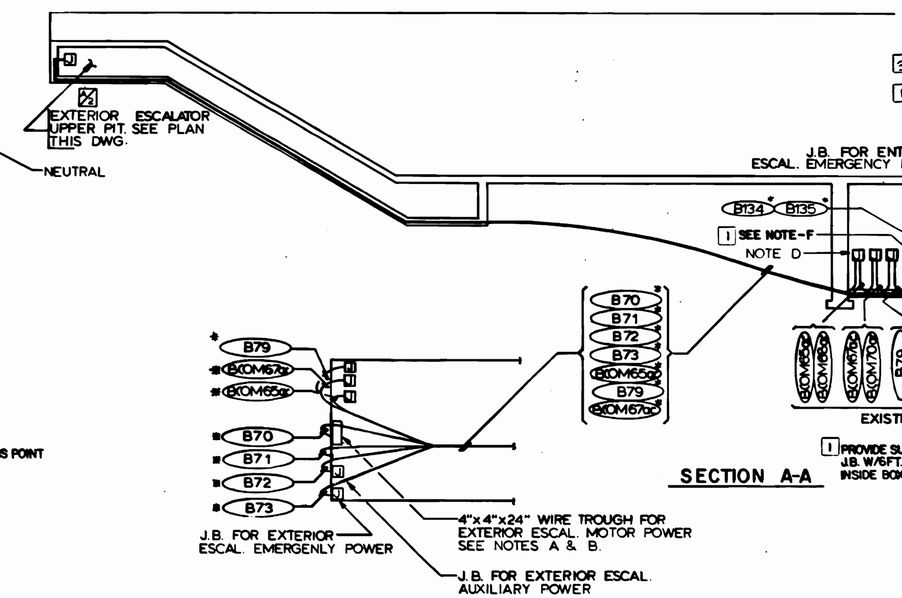

SECTION A-A

EXTERIOR ESCALATOR UPPER PIT
(PARTIAL PLAN) NOT TO SCALE

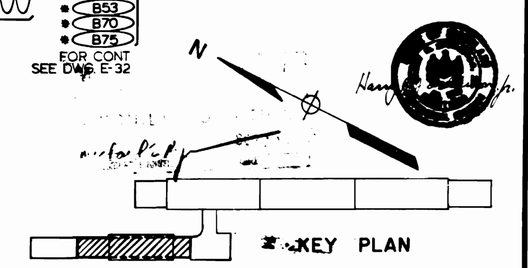

KEY PLAN

DESIGNED	P. S. CHU	1-3-75 DATE
DRAWN	ELENA ROCHA	1-4-75 DATE
CHECKED	H.B. ZACKRISON	6-16-80 DATE
APPROVED	H.B. ZACKRISON	6-16-80 DATE

REFERENCE DRAWINGS

NUMBER	DESCRIPTION
A-3	FUNCTIONAL ENT. - PLAN & SECTION
A-36	ESCAL. SECTION
M-27	ESCAL. SECTION

REVISIONS

DATE	BY		DESCRIPTION
9-25-80	H. Z.		RELOCATED PYLON, REVISED B285
			ROUTING & SITE LTG. CONT. DIAG.
			GENERAL REVISION
7-8-83	MD	1	REV. PER PCO. 7, AS-BUILT
		2	REV. PER PCO. 76, AS-BUILT
		3	REV. PER FIELD COND., AS-BUILT

3889-R

WASHINGTON METROPOLITAN AREA TRANSIT AUTHORITY

MATHEWS • CHATELAIN • BEALL
ENGINEERS AND ARCHITECTS
SECTION DESIGNER

SUBMITTED Jerry R. Gross DATE 8-15-80

DE LEUW, CATHER & COMPANY
GENERAL ENGINEERING CONSULTANT

HARRY WEESE & ASSOCIATES
GENERAL ARCHITECTURAL CONSULTANT

APPROVED

ROCKVILLE ROUTE
BETHESDA STATION - ENTRANCE
ESCALATORWAY PLAN - LIGHTING & POWER

SCALE 1/8" = 1'-0" 10 2 4 6 8 10 AND AS NOTED

DRAWING NO. FA 11 - E-26

M334-174

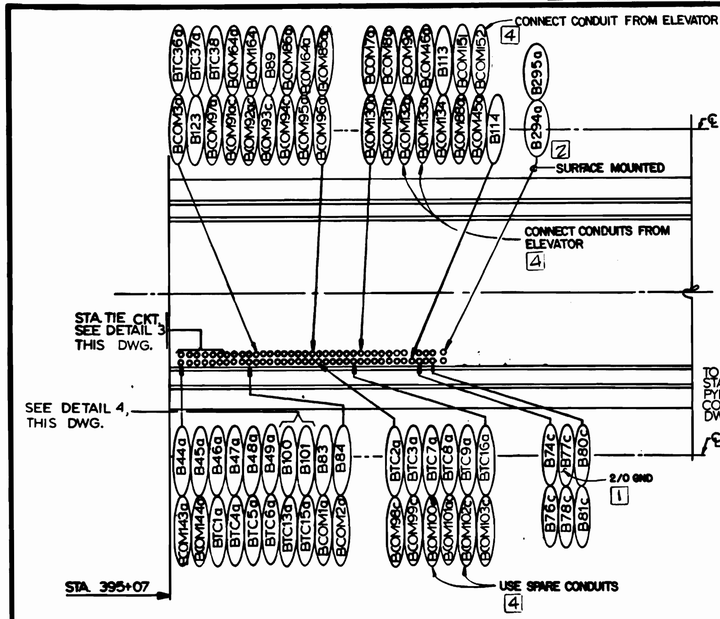

1 PARTIAL PLAN NORTH R.A. PLENUM
(CONDUIT STUB-UPS ARE EXISTING) NOT TO SCALE

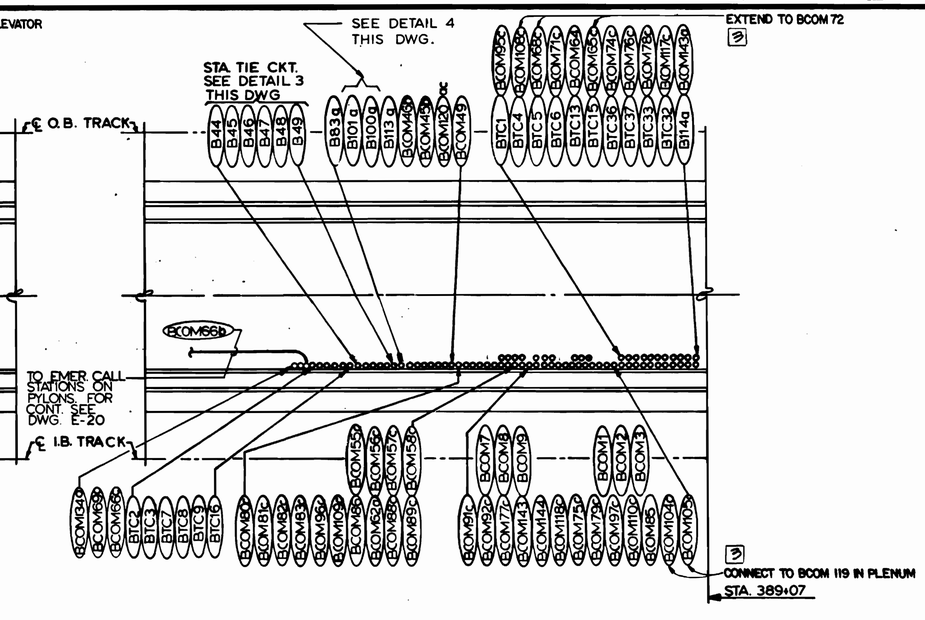

2 PARTIAL PLAN SOUTH R.A. PLENUM
(CONDUIT STUB-UPS ARE EXISTING) NOT TO SCALE

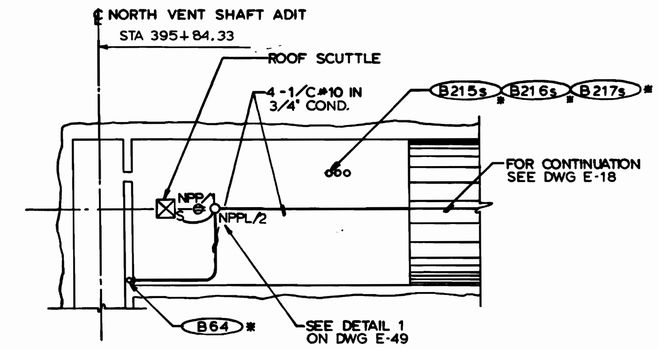

5 NORTH ATTIC PLAN
SCALE: 1/16"=1'-0"

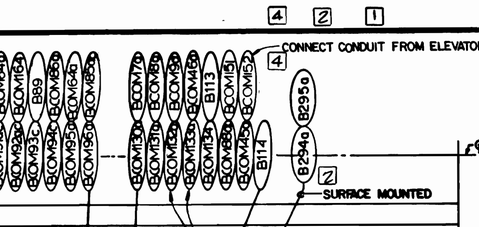

3 PARTIAL NORTH R.A. PLENUM PLAN
(SOUTH R.A. PLENUM SIMILAR) NOT TO SCALE

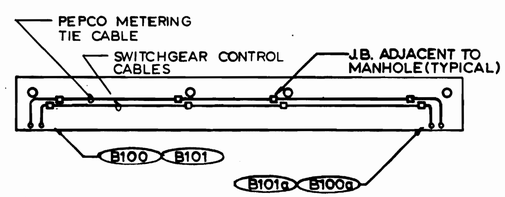

4 STATION PLATFORM PLAN
NOT TO SCALE

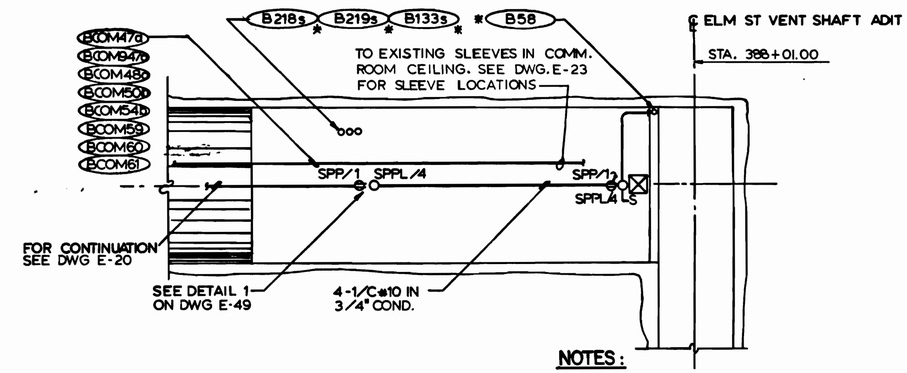

6 SOUTH ATTIC PLAN
SCALE: 1/16"=1'-0"

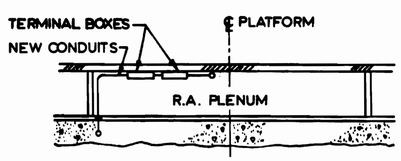

8 SECTION A-A
NOT TO SCALE

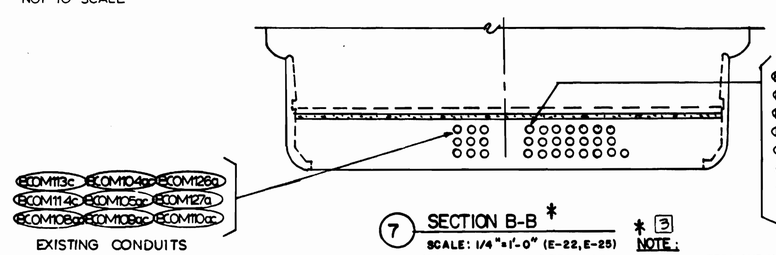

7 SECTION B-B *
SCALE: 1/4"=1'-0" (E-22, E-25)
(FOR CLARITY, UNDERFLOOR DUCT IS NOT SHOWN) SEE NOTE A

* 3
NOTE:
PROVIDE SWEEPS AND NECESSARY PULL BOXES TO EXTEND CONDUIT THROUGH OPENINGS OF STRUCTURAL STEEL (SEE E-22)

NOTES:

A. FIELD VERIFY EXACT LOCATIONS OF EXISTING CAST-IN-PLACE CONDUITS.

B. HOISTWAY TO MACHINE ROOM: RUN 3-2" GRS CONDUITS FROM THE HOISTWAY TO THE ELEVATOR MACHINE ROOM FOR ELEVATOR CONTROL. UTILIZE SLEEVES BCOM 132 ba, BCOM 133 ba AND BCOM 152 as (ALL 3 1/2" I.D.) AT THE HOISTWAY. CONNECT TO EMBEDDED CONDUITS BCOM 132 a, BCOM 133 a AND BCOM 152 IN THE FLOOR OF THE RETURN AIR PLENUM. LABEL SLEEVE BCOM 151 as (2 1/2" I.D.) AND EMBEDDED CONDUIT BCOM 151 AS "SPARE" IN THE CONDUIT SCHEDULE. 4

C. MACHINE ROOM TO KIOSK: USE "SPARE" EMBEDDED CONDUITS BCOM100ac AND BCOM 102c FROM THE MACHINE ROOM TO THE RETURN AIR PLENUM. RUN 2-2" GRS CONDUITS FROM WHERE THE EMBEDDED CONDUITS EXIT THE SLAB TO A JUNCTION BOX LOCATED A CONVENIENT DISTANCE AWAY. FROM THE J.B. RUN 1-3" CONDUIT UNDER THE ELEVATOR HOISTWAY TO THE WIRE TROUGH AT THE COLUMN BELOW THE KIOSK. UTILIZE "SPARE" CONDUIT, B157 FROM THE BOTTOM TO THE TOP OF THE COLUMN. EXTEND THE 3" CONDUIT FROM THE TOP OF THE COLUMN TO 6" ABOVE THE FINISH FLOOR BENEATH THE KIOSK. 4

DESIGNED	R.S. CHU	8-1-79 DATE
	B. STAUFFER	
DRAWN	K. ROBINSON	12-12-79 DATE
CHECKED	H.B. ZACKRISON	6-16-80 DATE
APPROVED	H.B. ZACKRISON	6-16-80 DATE

REFERENCE DRAWINGS

NUMBER	DESCRIPTION

REVISIONS

DATE	BY		DESCRIPTION
7-8-83	MD	1	REV. PER PCO. 10, AS-BUILT
		2	REV. PER PCO. 36, AS-BUILT
		3	REV. PER PCO. 48, AS-BUILT
		4	REV. PER PCO. 87, AS-BUILT

3869-R

WASHINGTON METROPOLITAN AREA TRANSIT AUTHORITY

MATHEWS • CHATELAIN • BEALL
ENGINEERS AND ARCHITECTS
SECTION DESIGNER
SUBMITTED DATE 8-15-80

DE LEUW, CATHER & COMPANY
GENERAL ENGINEERING CONSULTANT

HARRY WEESE & ASSOCIATES
GENERAL ARCHITECTURAL CONSULTANT
APPROVED

ROCKVILLE ROUTE
BETHESDA STATION
STATION DETAILS

SCALE: AS NOTED
DRAWING NO. FA11-E-126
M334-175

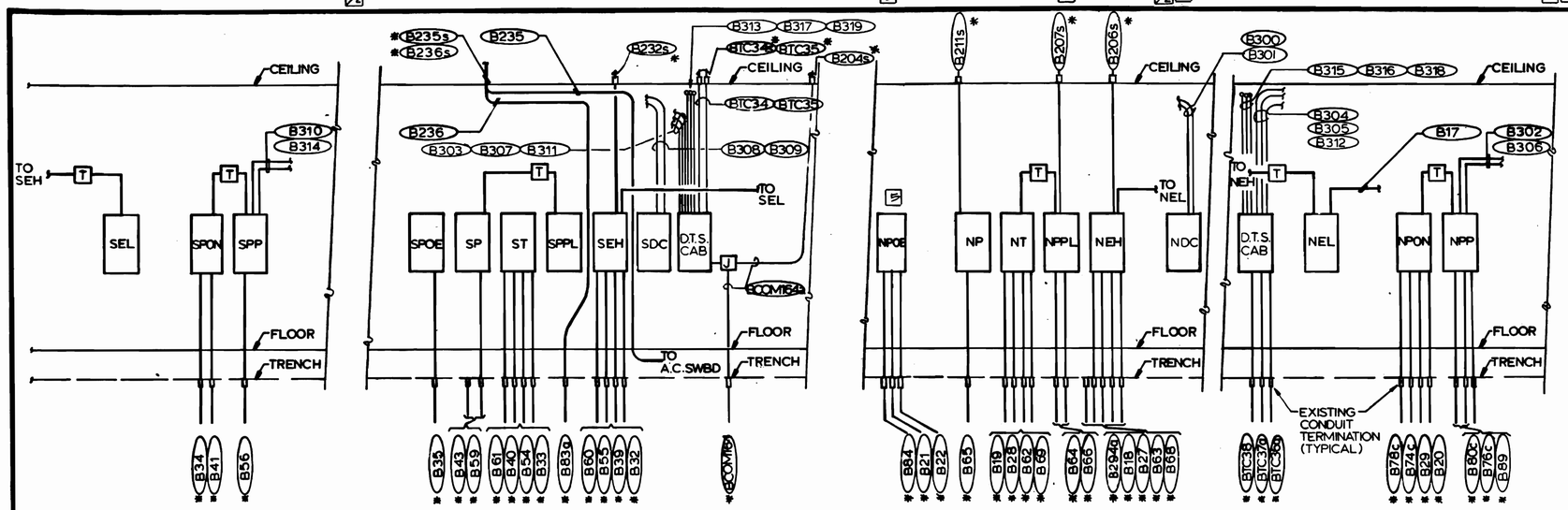

ELEVATION C-C
N.T.S. (E-17)

ELEVATION D-D
N.T.S. (E-17)

ELEVATION A-A
N.T.S. (E-17)

ELEVATION B-B
N.T.S. (E-17)

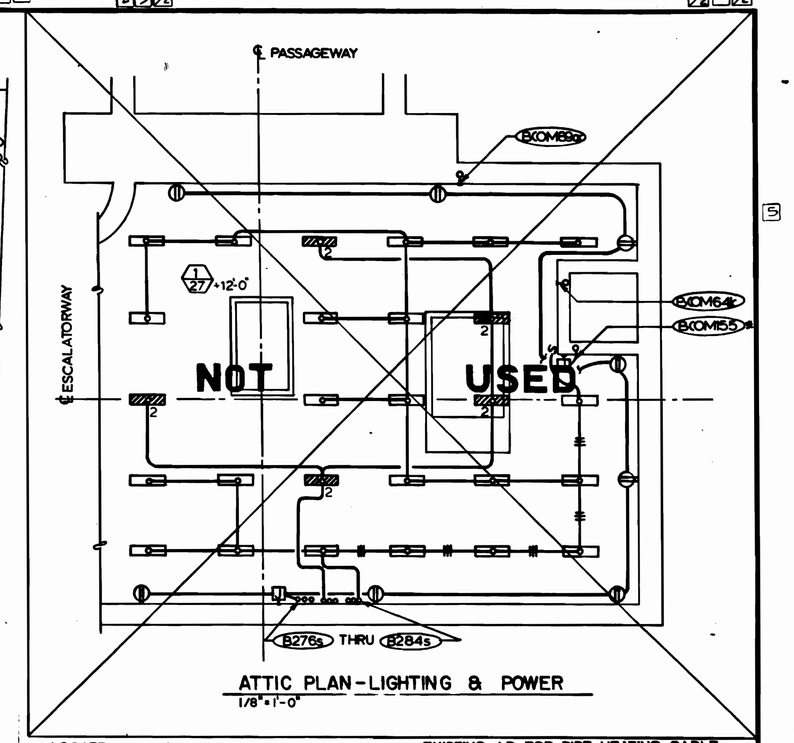

ATTIC PLAN-LIGHTING & POWER
1/8"=1'-0"

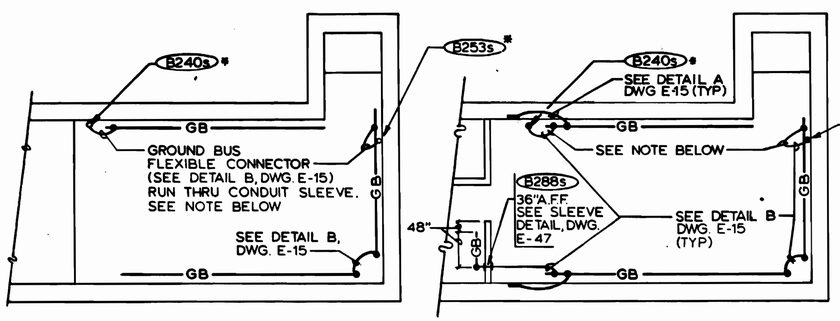

LOWER LEVEL

UPPER LEVEL

BETHESDA T.P.S.S. GROUND BUS ARRANGEMENT
NOT TO SCALE (E-32,33)

NOTE: GROUND BUS FLEXIBLE CONNECTOR SHALL BE EXOTHERMICALLY WELDED TO EXISTING GSR CONDUIT SLEEVE WHERE IT ENTERS AND EXISTS SLEEVE.

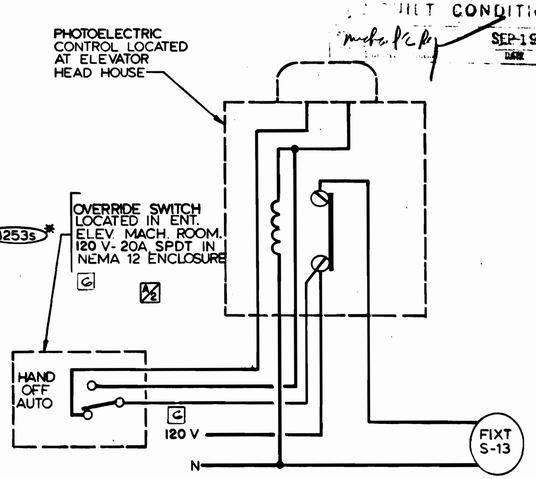

WIRING DIAGRAM-FIXTURE TYPE S-13 PHOTOCONTROL
NOT TO SCALE (E-25)

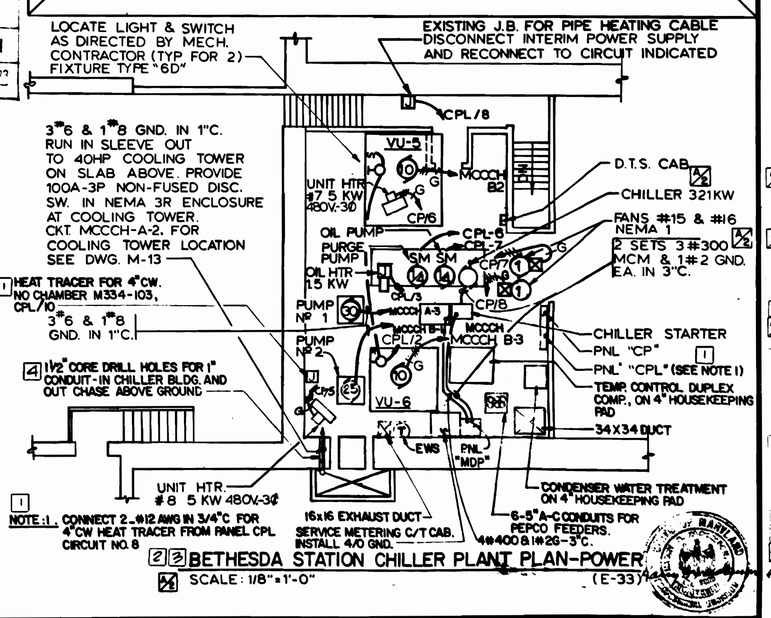

BETHESDA STATION CHILLER PLANT PLAN-POWER
SCALE: 1/8"=1'-0" (E-33)

7-12-83	MD	6	REV. PER FIELD COND., AS-BUILT
	"	5	REV. PER PCO. 78, AS-BUILT
	"	4	REV. PER PCO. 64, AS-BUILT
	"	3	REV. PER PCO. 56 REV. 1, AS-BUILT

DESIGNED	P.S. CHU / B STAUFFER	8-15-79 DATE
DRAWN	B.N. JOHNSON	9-1-79 DATE
CHECKED	H.B. ZACKRISON	6-15-80 DATE
APPROVED	H.B. ZACKRISON	6-15-80 DATE

REFERENCE DRAWINGS

NUMBER	DESCRIPTION

REVISIONS

DATE	BY		DESCRIPTION
9-25-80	H.Z.		REVISED CHILLER FEEDER & DESIGNATION
			CORRECTED VOLT. ON OVERRIDE SWITCH
			GENERAL REVISION TO CHILLER PLANT
			PLAN & GROUND BUS ARRANGEMENT
7-12-83	MD	1	REV. PER PCO. 7, AS-BUILT
	"	2	REV. PER PCO. 56, AS-BUILT

3989-R

WASHINGTON METROPOLITAN AREA TRANSIT AUTHORITY

MATHEWS • CHATELAIN • BEALL
ENGINEERS AND ARCHITECTS
SECTION DESIGNER
SUBMITTED _____ DATE 8-15-80

DE LEUW, CATHER & COMPANY
GENERAL ENGINEERING CONSULTANT

HARRY WEESE & ASSOCIATES
GENERAL ARCHITECTURAL CONSULTANT
APPROVED _____

ROCKVILLE ROUTE
BETHESDA STATION
PLANS & ELEVATIONS

SCALE: AS NOTED
DRAWING NO. FAII-E-127
M334-176

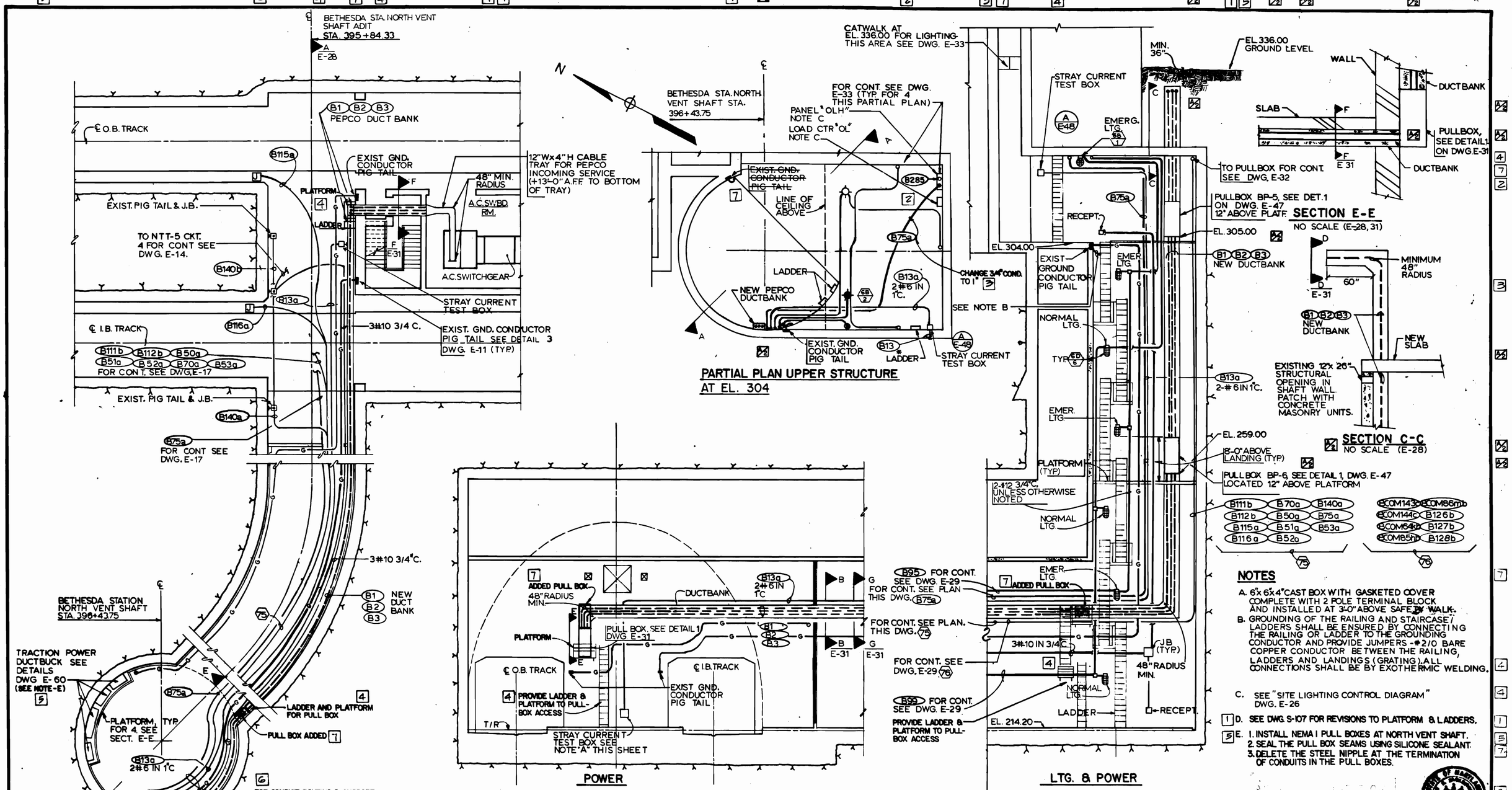

NOTES

A. 6'x 6'x 4" CAST BOX WITH GASKETED COVER COMPLETE WITH 2 POLE TERMINAL BLOCK AND INSTALLED AT 3'-0" ABOVE SAFETY WALK.

B. GROUNDING OF THE RAILING AND STAIRCASE/LADDERS SHALL BE ENSURED BY CONNECTING THE RAILING OR LADDER TO THE GROUNDING CONDUCTOR AND PROVIDE JUMPERS -#2/0 BARE COPPER CONDUCTOR BETWEEN THE RAILING, LADDERS AND LANDINGS (GRATING). ALL CONNECTIONS SHALL BE BY EXOTHERMIC WELDING.

C. SEE "SITE LIGHTING CONTROL DIAGRAM" DWG. E-26

1 D. SEE DWG. S-107 FOR REVISIONS TO PLATFORM & LADDERS.

5 E. 1. INSTALL NEMA I PULL BOXES AT NORTH VENT SHAFT.
2. SEAL THE PULL BOX SEAMS USING SILICONE SEALANT.
3. DELETE THE STEEL NIPPLE AT THE TERMINATION OF CONDUITS IN THE PULL BOXES.

DESIGNED	P S CHU	11-1-74 DATE
DRAWN	ELENA ROCHA	5-16-75 DATE
CHECKED	N.B. ZACKRISON	6-16-80 DATE
APPROVED	N.B. ZACKRISON	6-16-80 DATE

REFERENCE DRAWINGS

NUMBER	DESCRIPTION
S-107	N VENT SHAFT LADDER & TYP. LADDER DET.
S-113	N VENT SHAFT UPPER STRUC. DET.
M-10	N VENT SHAFT PLAN & SECTION
E-60	N VENT SHAFT DUCT BANK DET.

REVISIONS

DATE	BY		DESCRIPTION
9-25-80	H.Z.		REVISED PEPCO DUCTBANK
7-15-83	MD	1	REV. PER PCO. 75, AS-BUILT
	"	2	REV. PER PCO. 78, AS-BUILT
	"	3	REV. PER PCO. 79, AS-BUILT
	"	4	REV. PER PCO. 83, AS-BUILT
	"	5	REV. PER PCO. 86, AS-BUILT
7-15-83	MD	7	REV. PER FIELD COND., AS-BUILT
	"	6	REV. PER PCO. 89, AS-BU

REGISTERED PROFESSIONAL ENGINEER 3989-R STATE OF MARYLAND

WASHINGTON METROPOLITAN AREA TRANSIT AUTHORITY

MATHEWS • CHATELAIN • BEALL
ENGINEERS AND ARCHITECTS
SECTION DESIGNER
SUBMITTED Jennifer A. O'Neal DATE 8-15-80

DE LEUW, CATHER & COMPANY
GENERAL ENGINEERING CONSULTANT

HARRY WEESE & ASSOCIATES
GENERAL ARCHITECTURAL CONSULTANT
APPROVED

ROCKVILLE ROUTE
BETHESDA STATION
NORTH VENT SHAFT PLAN-LTG. & POWER

SCALE 1/8" = 1'-0" 10 2 4 6 8 10

DRAWING NO. FA11-E-28

M334-177

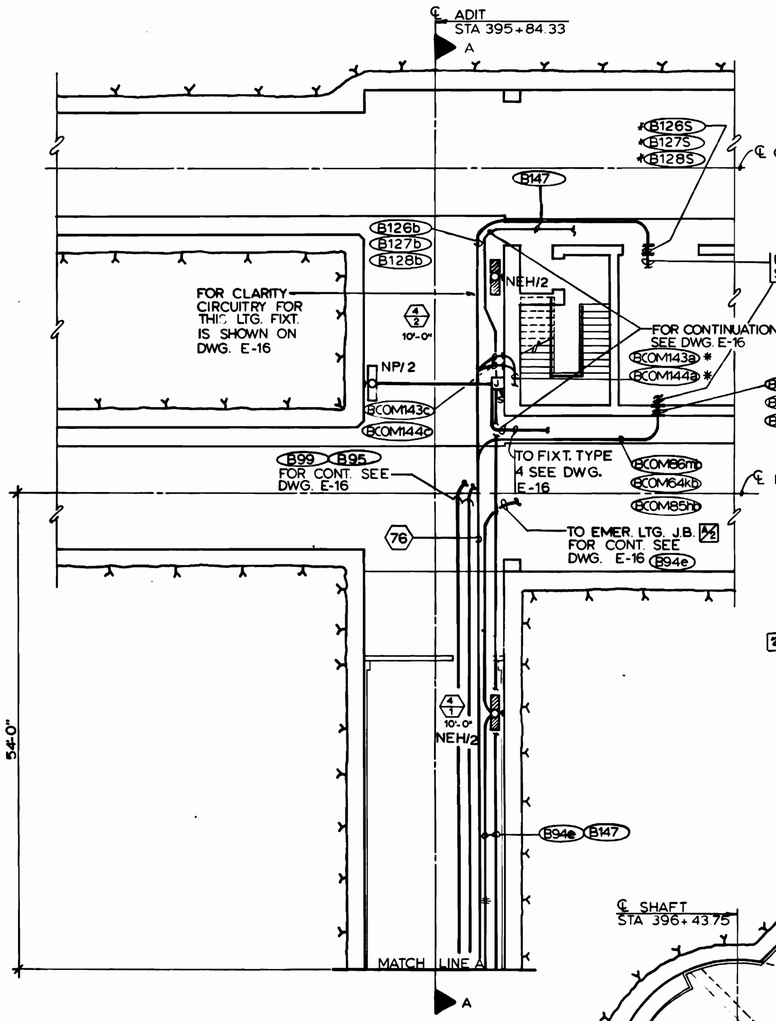

PLAN AT TRACK LEVEL

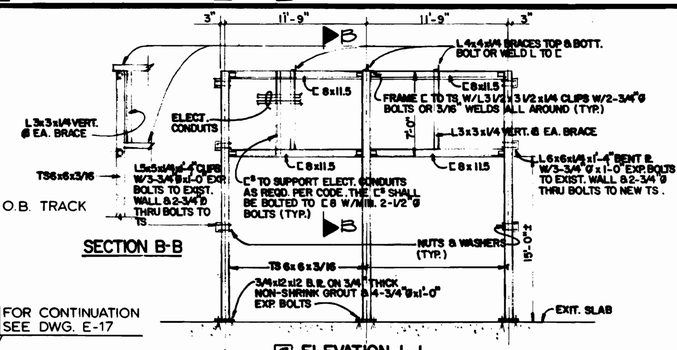

SECTION B-B

2 ELEVATION 1-1

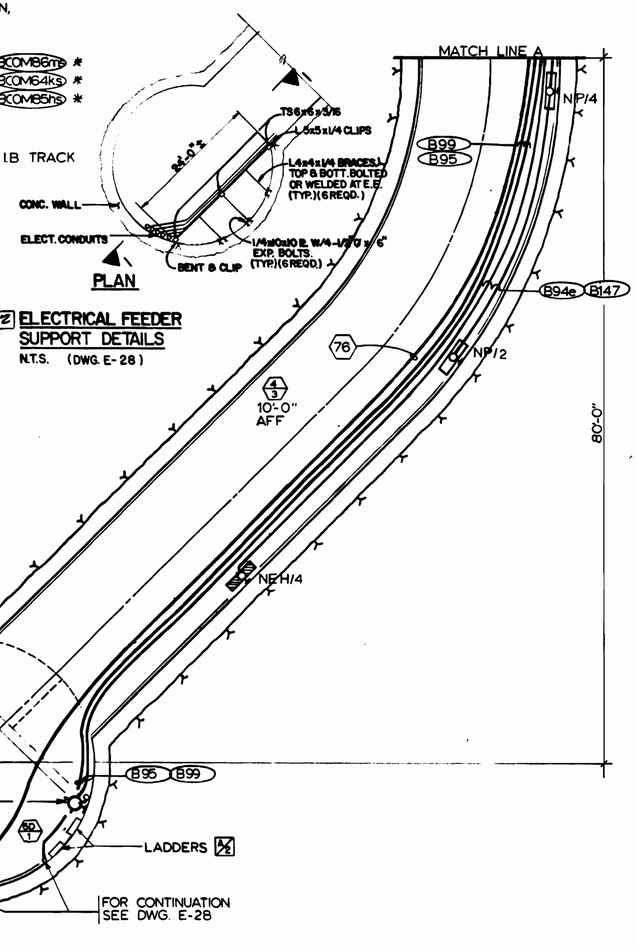

2 ELECTRICAL FEEDER SUPPORT DETAILS
N.T.S. (DWG. E-28)

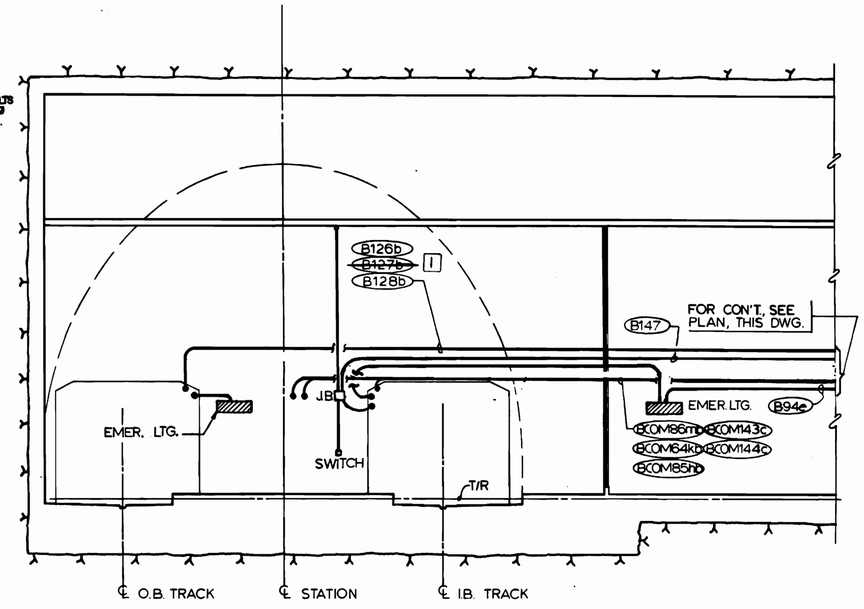

SECTION A-A

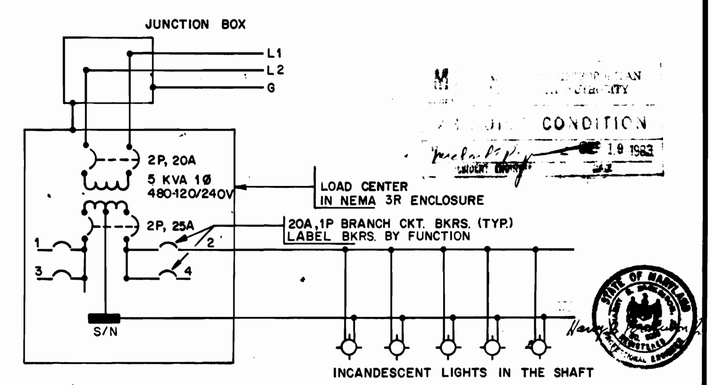

LOAD CENTER WIRING DIAGRAM FOR WEST VIRGINIA AVENUE FAN SHAFT
SCALE: NONE (E-36)

DESIGNED	P S CHU	11-1-74 DATE
DRAWN	ELENA ROCHA	5-16-75 DATE
CHECKED	H.B. ZACKRISON	6-16-80 DATE
APPROVED	H.B. ZACKRISON	6-16-80 DATE

REFERENCE DRAWINGS		REVISIONS			
NUMBER	DESCRIPTION	DATE	BY		DESCRIPTION
S-107	NORTH VENT SHAFT - LADDER AND TYP. LADDER DTL.	9-25-80	H.Z.		REVISED NOTE, IDENTIFIED LADDERS
M-10	NORTH VENT SHAFT - PLAN AND SECTION	7-18-83	MD	1	REV. PER PCO. 78, AS-BUILT
				2	REV. PER PCO. 89, AS-BUILT

REGISTRATION OF ARCHITECTS 3889-R STATE OF MARYLAND

WASHINGTON METROPOLITAN AREA TRANSIT AUTHORITY

MATHEWS • CHATELAIN • BEALL
ENGINEERS AND ARCHITECTS
SECTION DESIGNER
SUBMITTED _____ DATE 8-15-80

DE LEUW, CATHER & COMPANY
GENERAL ENGINEERING CONSULTANT
HARRY WEESE & ASSOCIATES
GENERAL ARCHITECTURAL CONSULTANT
APPROVED _____

ROCKVILLE ROUTE
BETHESDA STATION
NORTH VENT SHAFT PLAN — LIGHTING

SCALE 1/8"=1'-0" 0 2 4 6 8 10
DRAWING NO. FA11-E-29
M334-178

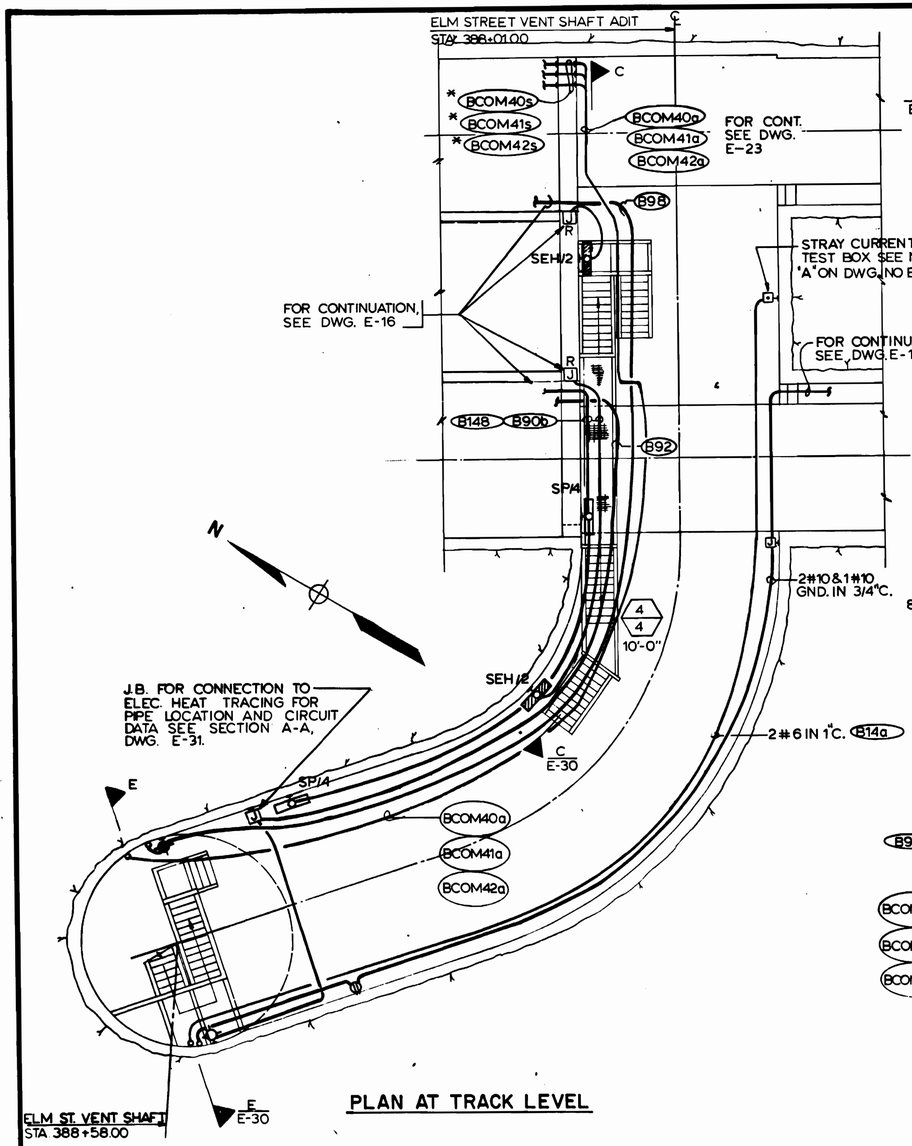

PLAN AT TRACK LEVEL

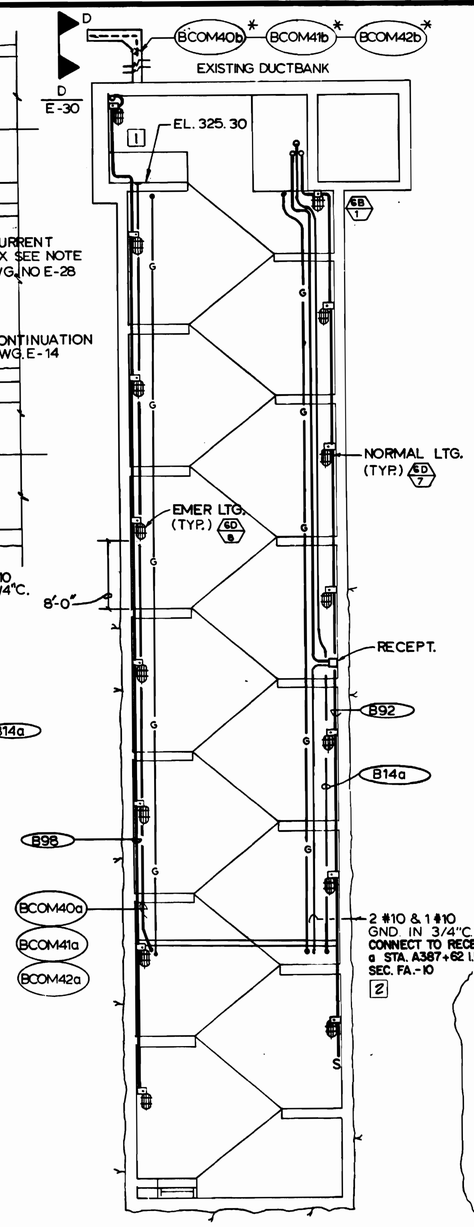

SECTION E-E
(E-30, 31)

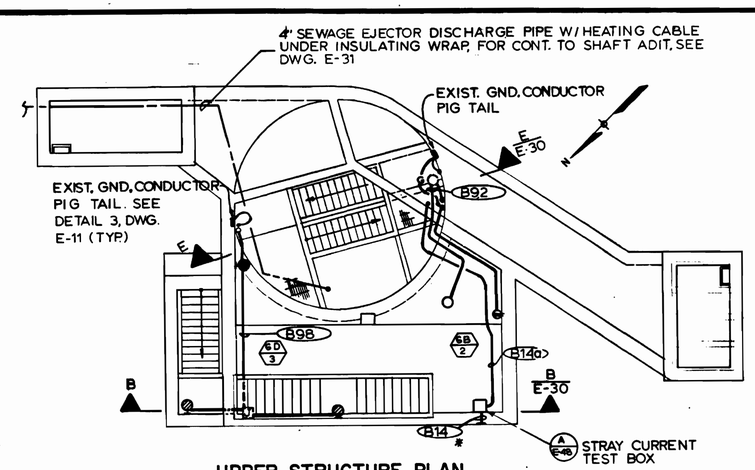

UPPER STRUCTURE PLAN

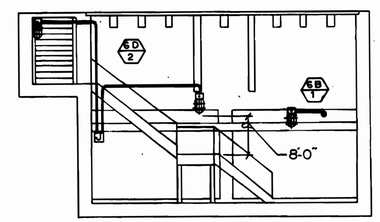

SECTION B-B
(E-30)

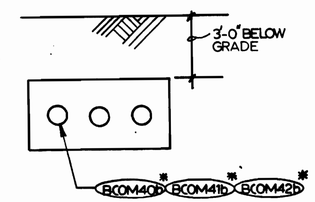

ELEVATION D-D
NOT TO SCALE (E-30)

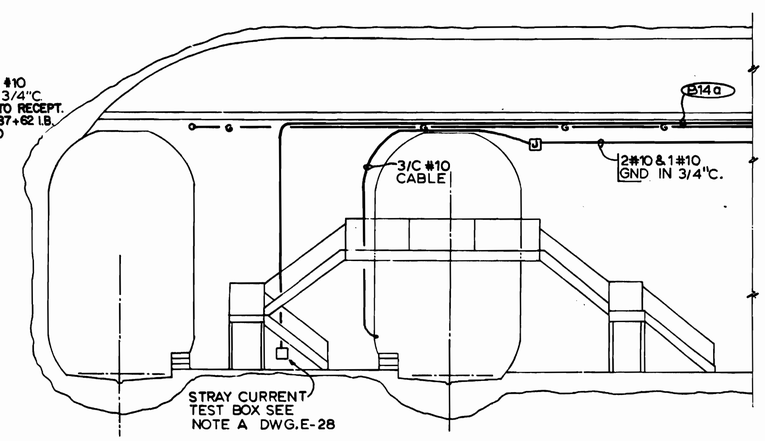

SECTION C-C
(E-30)

DESIGNED	P. S. CHU	1/15/76 DATE
DRAWN	E. ROCHA	2/26/76 DATE
CHECKED	H.B. ZACKRISON	8/15/80 DATE
APPROVED	H.B. ZACKRISON	8/15/80 DATE

REFERENCE DRAWINGS

NUMBER	DESCRIPTION
S-108	ELM STREET VENT SHAFT STAIRS AND MISC. DTLS
M-11	ELM STREET VENT SHAFT PLAN AND SECTION

REVISIONS

DATE	BY		DESCRIPTION
7-18-83	MD	1	REV. PER PCO. 30, AS-BUILT
		2	REV. PER PCO. 76, AS-BUILT

3889-R

WASHINGTON METROPOLITAN AREA TRANSIT AUTHORITY

MATHEWS • CHATELAIN • BEALL
ENGINEERS AND ARCHITECTS
SECTION DESIGNER

SUBMITTED _____ DATE 8-15-80

DE LEUW, CATHER & COMPANY
GENERAL ENGINEERING CONSULTANT

HARRY WEESE & ASSOCIATES
GENERAL ARCHITECTURAL CONSULTANT

APPROVED _____

ROCKVILLE ROUTE
BETHESDA STATION
ELM STREET VENT SHAFT PLAN – LIGHTING

SCALE 1/8"=1'-0" 10 0 2 4 6 8 10

DRAWING NO. FA11-E-30

M334-179

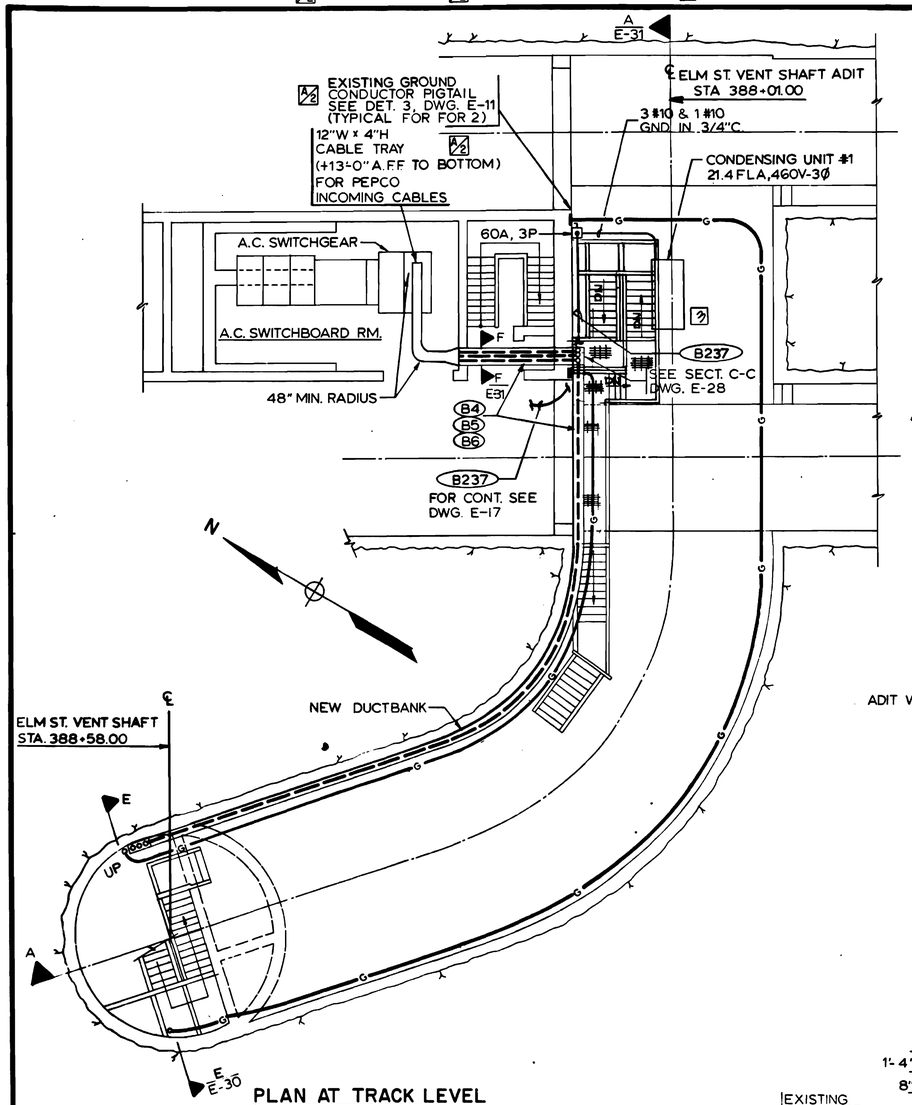

PLAN AT TRACK LEVEL

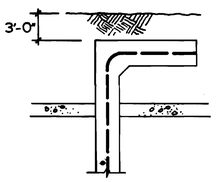

SECTION C-C
NOT TO SCALE
(E-31)

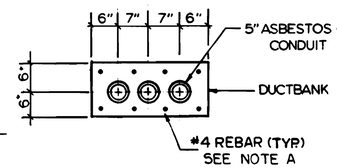

ELEVATION D-D
NOT TO SCALE
(E-28)

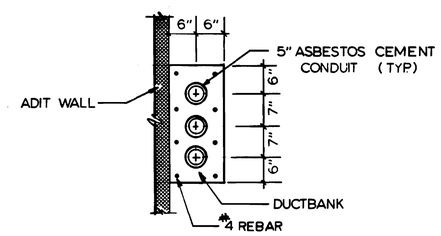

SECTION B-B
NOT TO SCALE
(E-28, 31)

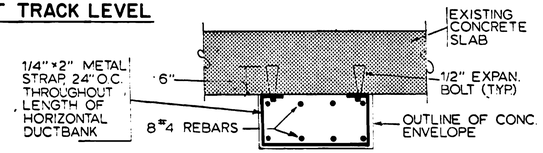

SECTION F-F STRUCTURAL
SCALE: 3/4" = 1'-0" (E-28, 31)

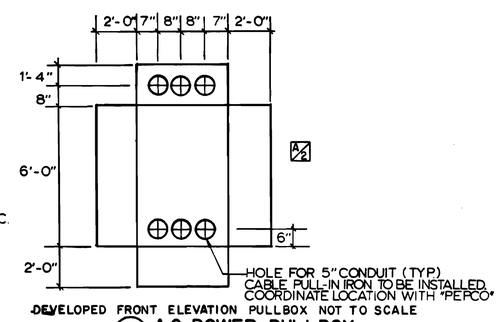

DEVELOPED FRONT ELEVATION PULLBOX NOT TO SCALE

(1) A.C. POWER PULLBOX
N.T.S. (E-28, 31)

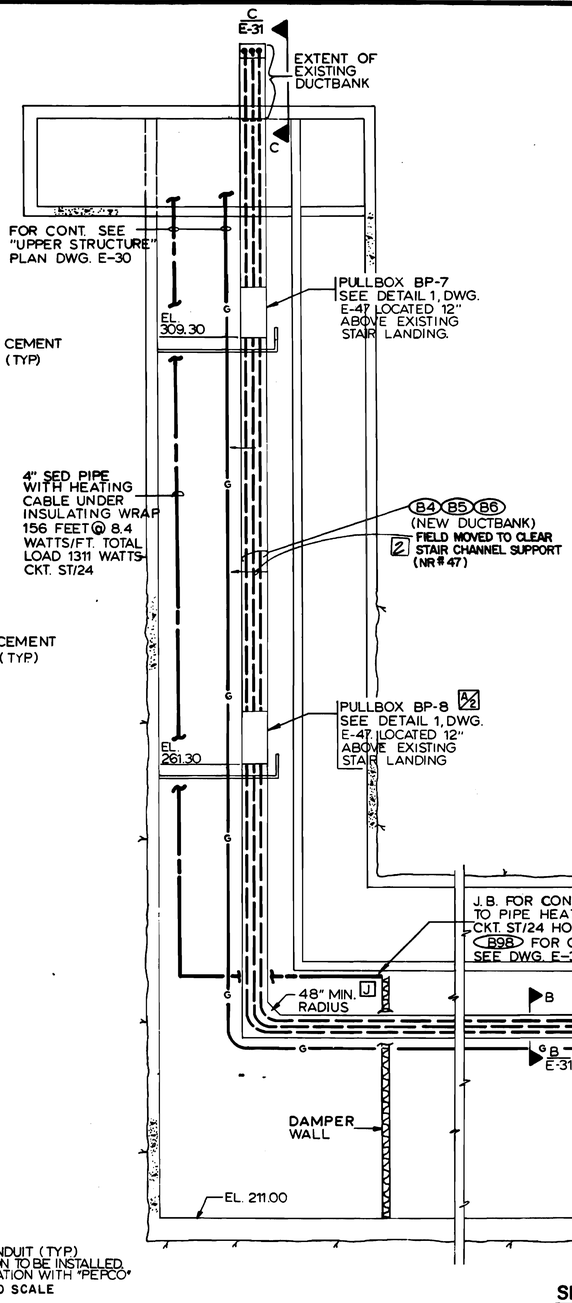

SECTION A-A

NOTES

A. EXTEND REBARS 2'-6" BEYOND FACE OF DUCTBANK FOR FUTURE EXTENSION BY PEPCO.

B. AFTER DRILLING FOR REBARS, GROUT WITH NON-SHRINK GROUT.

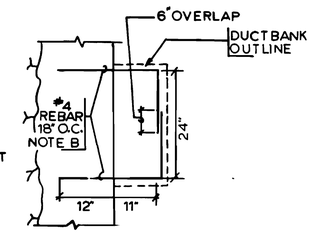

SECTION G-G-STRUCTURAL
SCALE: 3/4" = 1'-0" (E-28, 31)

AS BUILT CONDITION

DESIGNED	P. S. CHU	1/15/76 DATE
DRAWN	E. ROCHA	2/26/76 DATE
CHECKED	H. ZACKRISON	6/16/80 DATE
APPROVED	H. ZACKRISON	6/16/80 DATE

REFERENCE DRAWINGS

NUMBER	DESCRIPTION
S-108	ELM STREET VENT SHAFT STAIRS & MISC. DETAILS
M-11	ELM STREET VENT SHAFT PLAN AND SECTION

REVISIONS

DATE	BY		DESCRIPTION
9-25-80	H. Z.		GENERAL REVISIONS
7-18-83	MD	1	ADDED PULL BOX, AS-BUILT
		2	MOVE DUCTBANK TO CLEAR STAIR CHANNEL SUPPORT PER NR #47, AS-BUILT
		3	REV. PER PCO. 72, AS-BUILT

3880-R
STATE OF MARYLAND

WASHINGTON METROPOLITAN AREA TRANSIT AUTHORITY

MATHEWS • CHATELAIN • BEALL
ENGINEERS AND ARCHITECTS
SECTION DESIGNER
SUBMITTED _____ DATE 8-15-80

DE LEUW, CATHER & COMPANY
GENERAL ENGINEERING CONSULTANT

HARRY WEESE & ASSOCIATES
GENERAL ARCHITECTURAL CONSULTANT
APPROVED _____

ROCKVILLE ROUTE
BETHESDA STATION
ELM STREET VENT SHAFT PLAN - POWER

SCALE 1/8" = 1'-0" 10 2 4 6 8 10

DRAWING NO. FA11-E-31

M334-180

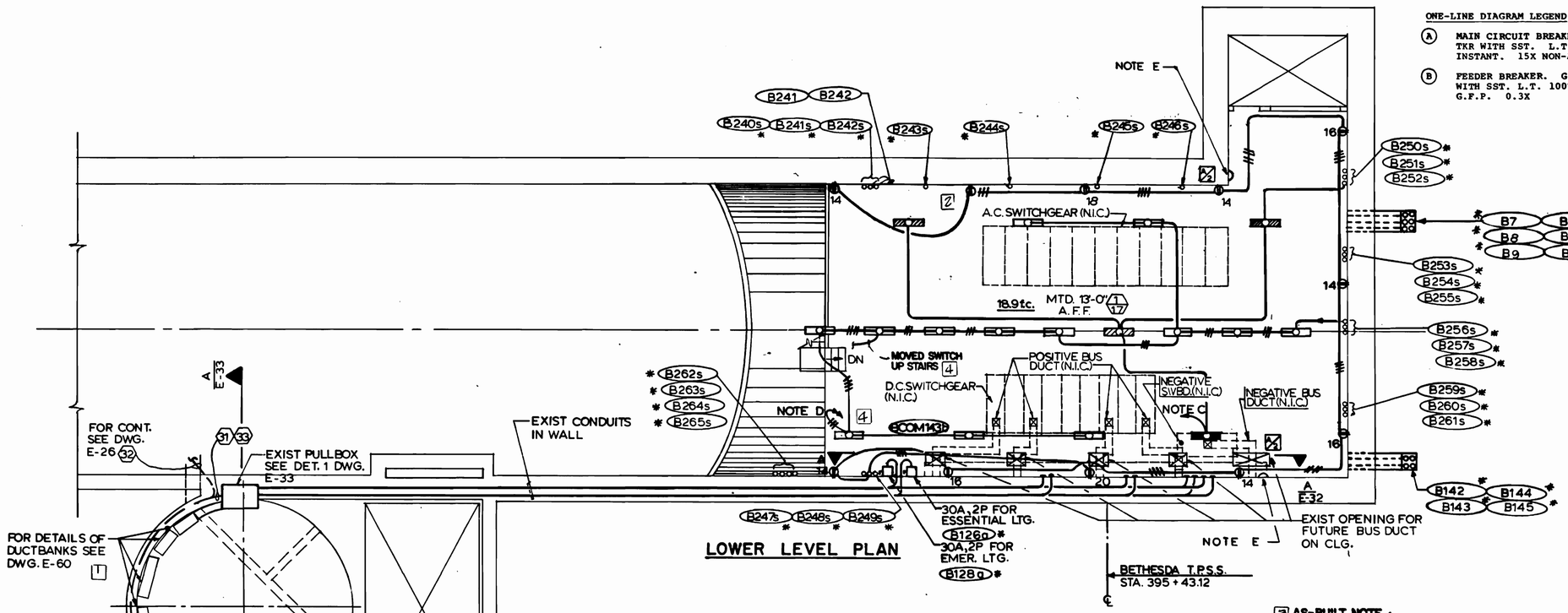

LOWER LEVEL PLAN

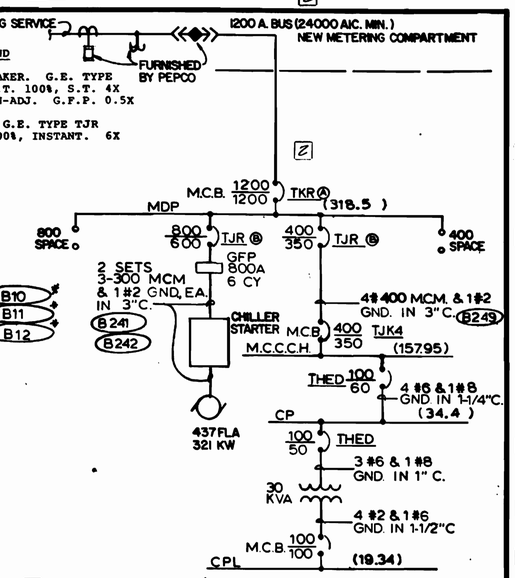

CHILLER PLANT ONE-LINE DIAGRAM

NOT TO SCALE — SEE NOTE F

ONE-LINE DIAGRAM LEGEND

(A) MAIN CIRCUIT BREAKER. G.E. TYPE TKR WITH SST. L.T. 100%, S.T. 4X INSTANT. 15X NON-ADJ. G.F.P. 0.5X

(B) FEEDER BREAKER. G.E. TYPE TJR WITH SST. L.T. 100%, INSTANT. 6X G.F.P. 0.3X

NOTES:

A. ALL SLEEVES IN CEILING SLAB UNLESS OTHERWISE NOTED

B. FOR GROUND BUS ARRANGEMENT, SEE DWG. E-127

C. TO EMER. LTG DISC. SWITCH.

D. TO ESSENTIAL LTG. DISC. SWITCH

E. EXISTING PULLING-IN IRON FOR ELECTRICAL CABLES.

F. SEE ONE-LINE DIAGRAM SYMBOL LIST ON AND NOTE C ON DWG. E-39

G. PROVIDE POWER SUPPLY TO N.I.C. SWGR. HTRS., UPS & A.T.S., COORDINATING THIS WORK WITH SSI STAGE CONTRACTOR. FOR CIRCUITS DEDICATED TO THIS EQUIP. SEE PANEL SCHEDULE "CPL", DWG. E-44, & "CP", DWG. E-41.

H. COORDINATE EXACT LOCATIONS OF LIGHTING FIXTURES WITH TRACTION POWER STAGE CONTRACTOR.

AS-BUILT NOTE:

SUBSTITUTE WESTINGHOUSE BREAKERS FOR GE BREAKERS AS FOLLOWS:

- MAIN BREAKER: NCG 31200F: 1200A FRAME, 1200A TRIP.
- CHILLER FEEDER BREAKER: LCG 3600F: 600A FRAME 600A TRIP.
- MCC FEEDER BREAKER: LCG 3400F: 400A FRAME 350A TRIP.
- TWO SPACES FOR 600A FRAME BREAKER.

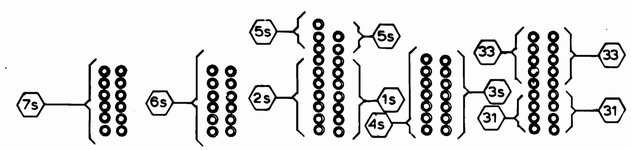

SECTION A-A

NO SCALE

ALL EXIST. CONDUITS

31	B111a	B112a	B115	B116	B126a	B127a	B128a	B129a
32	B50	B51	B52	B70	B53	B75		
33	COM143b	COM144b	COM64ka	B140	B141			
	COM85ha	COM86ma	COM161	COM162	COM163			
1s	DP1a THRU DP7a							
2s	DP8a THRU DP14a							
3s	DP15a THRU DP21a							
4s	DP22a THRU DP28a							
5s	DP29a THRU DP33a							
6s	DN1a THRU DN12a							
7s	DN13a THRU DN24a							

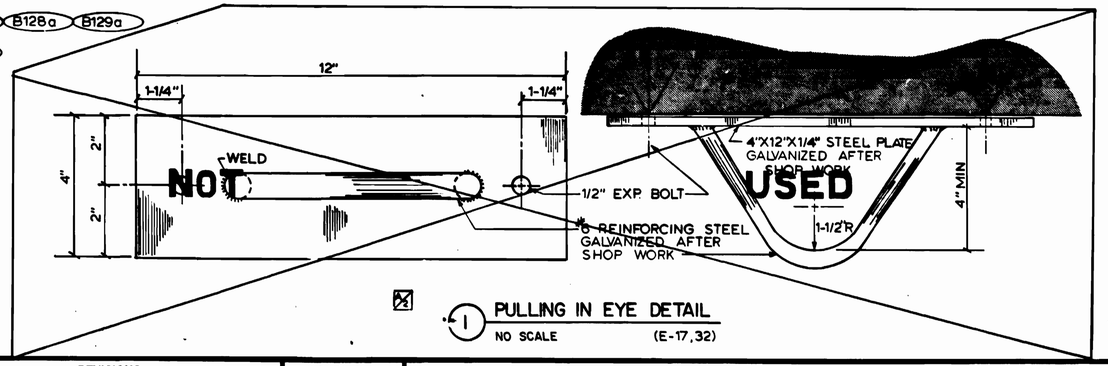

1 PULLING IN EYE DETAIL

NO SCALE (E-17,32)

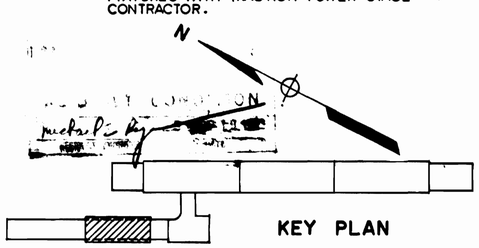

KEY PLAN

DESIGNED	P.S. CHU	8-16-76 DATE
DRAWN	E. ROCHA	8-16-76 DATE
CHECKED	H.B. ZACKRISON	8-16-80 DATE
APPROVED	H.B. ZACKRISON	8-16-80 DATE

REFERENCE DRAWINGS		REVISIONS			
NUMBER	DESCRIPTION	DATE	BY		DESCRIPTION
S-113	NORTH VENT SHAFT & PWR. SUBSTA. STAIRS & LADDER	9-25-80	H.Z.		REVISED PULLING-IN IRONS AND ADDED NOTE H
A-50	SUBSTATION - CHILLER PLANT				
M-25	SUBSTATION PLAN AND SECTION	7-19-83	MD	1	REV PER PCO. 30, AS-BUILT
				2	REV. PER PCO. 56, AS-BUILT
				3	REV. PER PCO. 56 REV.1, AS-BUILT
				4	REV. PER FIELD COND., AS-BUILT

WASHINGTON METROPOLITAN AREA TRANSIT AUTHORITY

MATHEWS • CHATELAIN • BEALL
ENGINEERS AND ARCHITECTS
SECTION DESIGNER

SUBMITTED _____ DATE 8-15-80

DE LEUW, CATHER & COMPANY
GENERAL ENGINEERING CONSULTANT

HARRY WEESE & ASSOCIATES
GENERAL ARCHITECTURAL CONSULTANT

APPROVED _____

ROCKVILLE ROUTE
BETHESDA STATION
TRACTION POWER S.S. LOWER LEVEL-LTG. & POWER

SCALE 1/8" = 1'-0" (10 2 4 6 8 10)

DRAWING NO. FA 11-E-32

M334-181

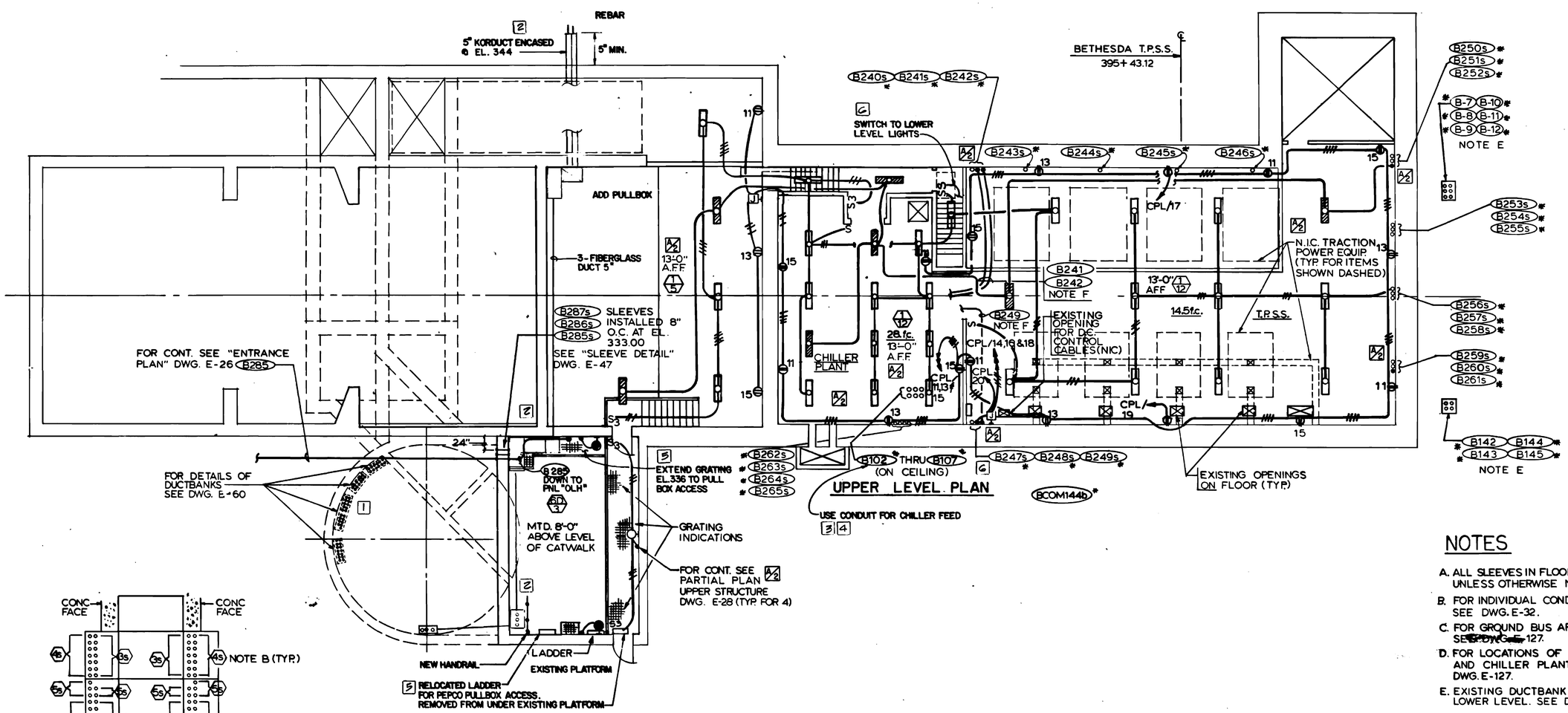

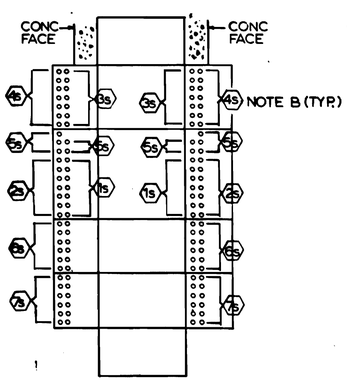

DETAIL 1 (E-32)
PULLBOX-EXPLODED VIEW

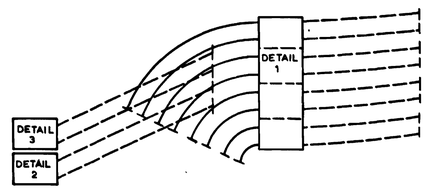

SECTION A-A (E-32)
(DEVELOPED) NOT TO SCALE

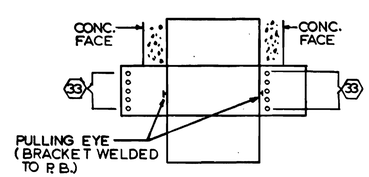

DETAIL 2 (E-32)
PULLBOX-EXPLODED VIEW

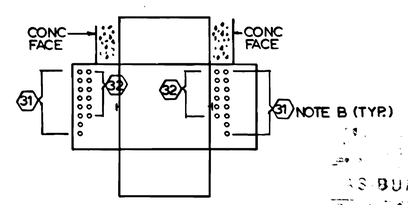

DETAIL 3 (E-32)
PULLBOX-EXPLODED VIEW

NOTES

A. ALL SLEEVES IN FLOOR SLAB UNLESS OTHERWISE NOTED.

B. FOR INDIVIDUAL CONDUIT DESIGNATIONS, SEE DWG. E-32.

C. FOR GROUND BUS ARRANGEMENT, SEE DWG. E-127.

D. FOR LOCATIONS OF PANELS CP, CPL AND CHILLER PLANT EQUIPMENT, SEE DWG. E-127.

E. EXISTING DUCTBANK DOWN TO TPSS LOWER LEVEL. SEE DWG. E-32.

F. FOR CONTINUATION SEE DWG. E-127

G. COORDINATE EXACT LOCATIONS OF LIGHTING FIXTURES WITH TRACTION POWER STAGE CONTRACTOR AND OTHER TRADES.

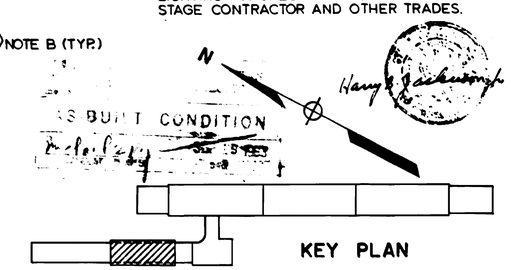

DESIGNED	P.S. CHU	8-16-76 DATE
DRAWN	E. ROCHA	8-16-76 DATE
CHECKED	H.B. ZACKRISON	6-16-80 DATE
APPROVED	H.B. ZACKRISON	6-16-80 DATE

REFERENCE DRAWINGS

NUMBER	DESCRIPTION
S-113	NORTH VENT SHAFT & PWR. SUBSTA. STAIRS & LADDER
A-50	SUBSTATION - CHILLER PLANT
M-25	SUBSTATION - PLAN & SECTION

REVISIONS

DATE	BY		DESCRIPTION
9-25-80	H.Z.		CLARIFIED LIGHTING FIXTURE LOCATIONS AND PURPOSE OF DASHED ITEMS
7-20-83	MD		
7-20-83	MD	1	REV. PER PCO. 30 , AS-BUILT
	"	2	REV. PER PCO. 51 , AS-BUILT
	"	3	REV. PER PCO. 56 , AS-BUILT
7-20-83	MD	6	REV. PER FIELD COND. , AS-BUILT
	"	5	REV. PER PCO. 83 , AS-BUILT
	"	4	REV. PER PCO. 56 REV. 1 , AS-BUILT

STATE OF MARYLAND 3389 R

WASHINGTON METROPOLITAN AREA TRANSIT AUTHORITY

MATHEWS • CHATELAIN • BEALL
ENGINEERS AND ARCHITECTS
SECTION DESIGNER
SUBMITTED DATE 8-16-80

DE LEUW, CATHER & COMPANY
GENERAL ENGINEERING CONSULTANT

HARRY WEESE & ASSOCIATES
GENERAL ARCHITECTURAL CONSULTANT
APPROVED

ROCKVILLE ROUTE
BETHESDA STATION
TRACTION POWER S.S. & CHILLER PLANT - LTG. & PWR.

SCALE 1/8" = 1'-0" 10 0 2 4 6 8 10
DRAWING NO. FA 11 - E - 33
M334-182

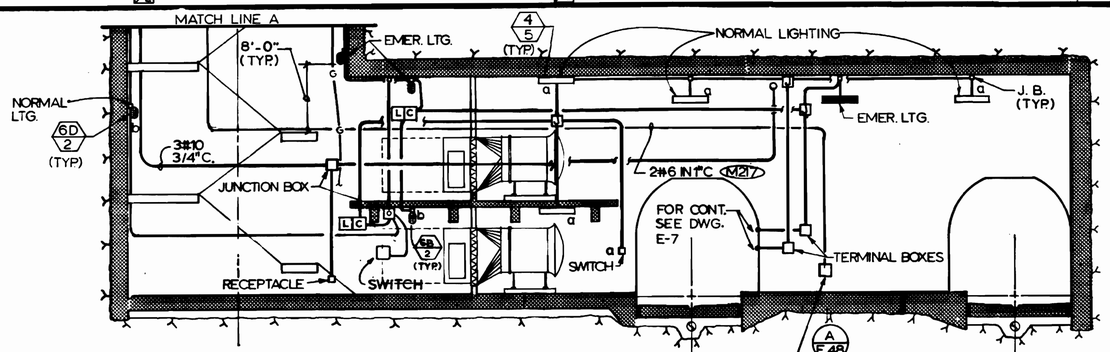

SECTION A-A

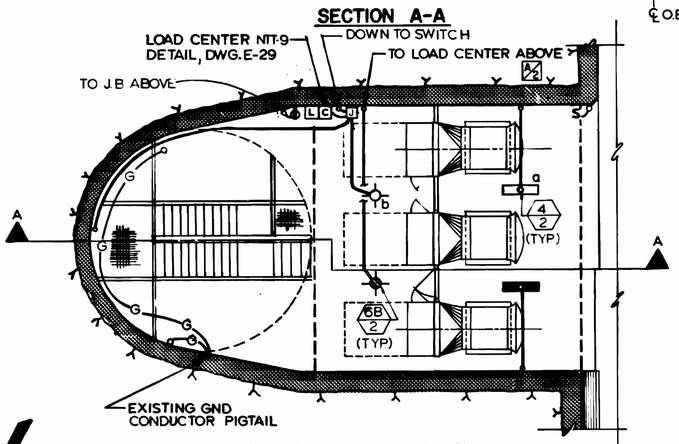

PLAN AT TRACK LEVEL

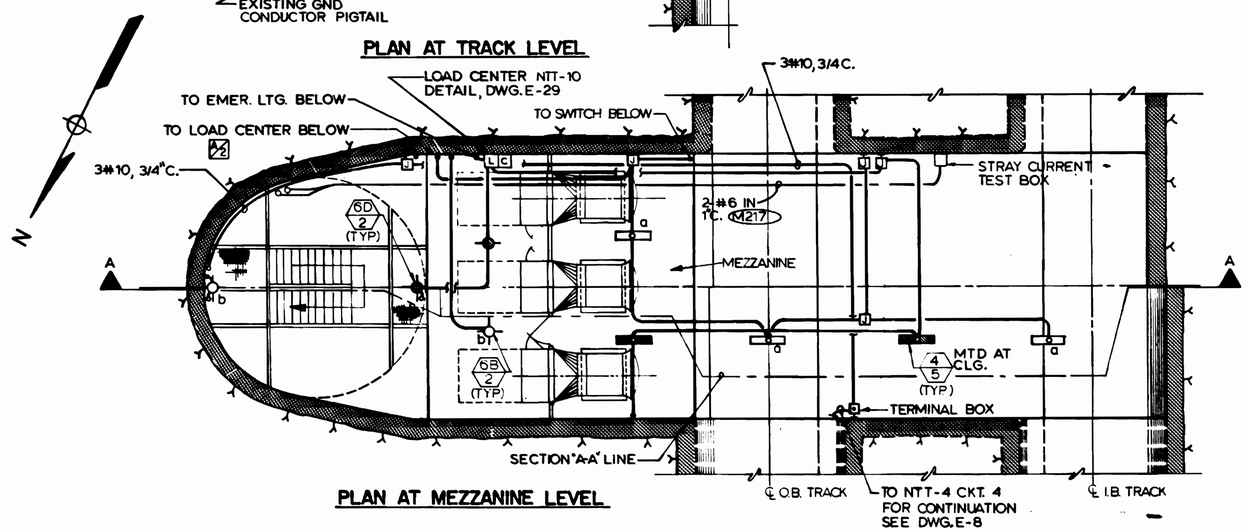

PLAN AT MEZZANINE LEVEL

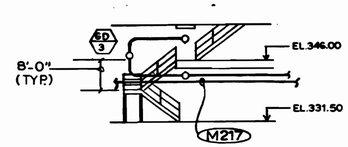

SECTION C-C

NOT TO SCALE

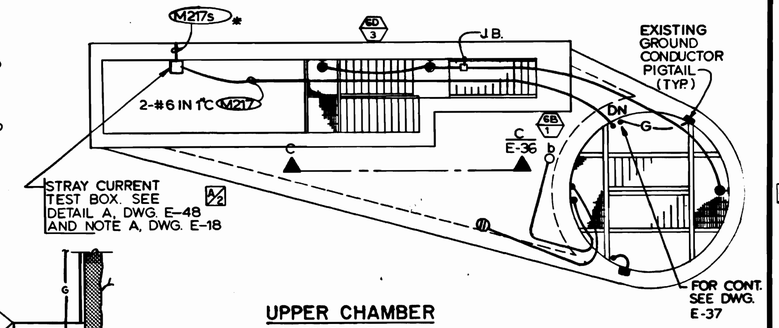

UPPER CHAMBER

NOT TO SCALE

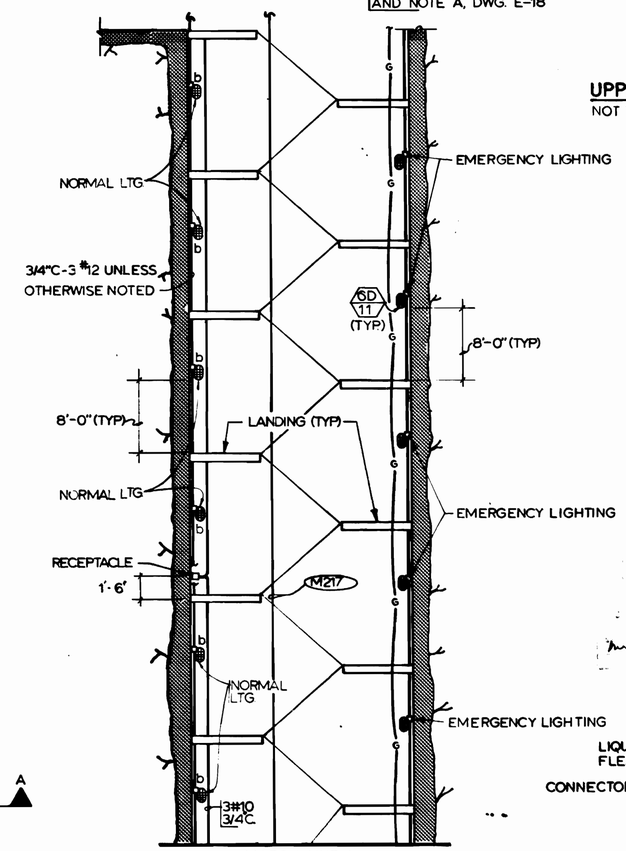

SECTION A-A

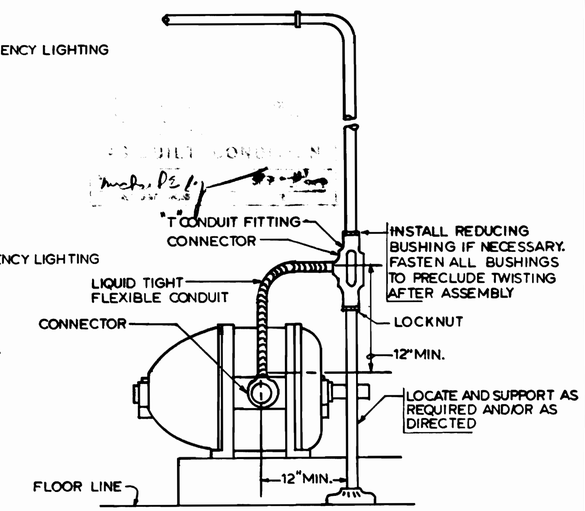

TYPICAL MOTOR CONNECTION DETAIL

NO SCALE

DESIGNED	P.S. CHU	11-1-74 DATE
DRAWN	B. STAUFFER / C.J. REID	5-1-75 DATE
CHECKED	H.B. ZACKRISON	8-16-80 DATE
APPROVED	H.B. ZACKRISON	8-16-80 DATE

REFERENCE DRAWINGS

NUMBER	DESCRIPTION
S-106	W. VA. AVE. FAN SHAFT STAIRS
M-9	W. VA. AVE. FAN SHAFT PLANS & SECTIONS

REVISIONS

DATE	BY	DESCRIPTION
9-25-80	H.Z.	CORRECTED STRAY CURRENT NOTE
		REVISED NOTES

WASHINGTON METROPOLITAN AREA TRANSIT AUTHORITY

MATHEWS • CHATELAIN • BEALL
ENGINEERS AND ARCHITECTS
SECTION DESIGNER

SUBMITTED [signature] DATE 8-15-80

DE LEUW, CATHER & COMPANY
GENERAL ENGINEERING CONSULTANT

HARRY WEESE & ASSOCIATES
GENERAL ARCHITECTURAL CONSULTANT

APPROVED [signature]

ROCKVILLE ROUTE
WEST VIRGINIA AVENUE
FAN SHAFT PLAN – LIGHTING

SCALE 1/8" = 1'-0" (1 0 2 4 6 8 10) AND AS NOTED

DRAWING NO. FA11-E-36

M334-183

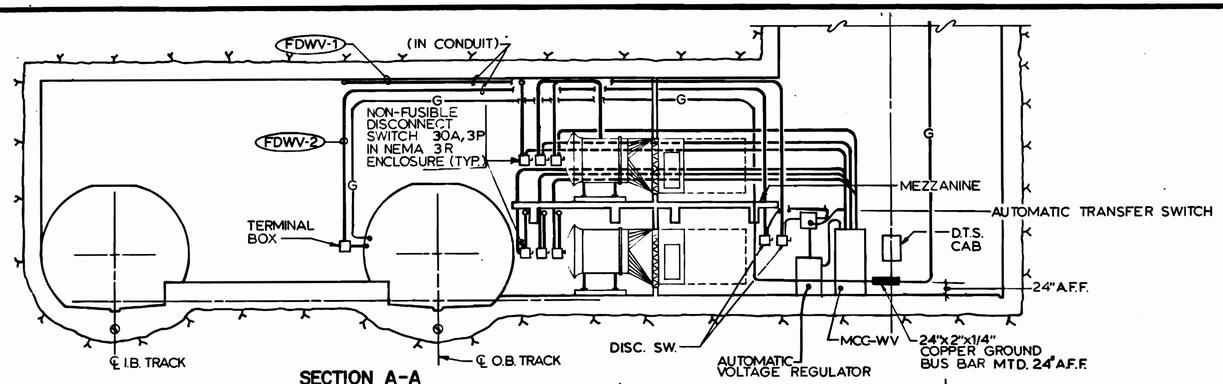

SECTION A-A

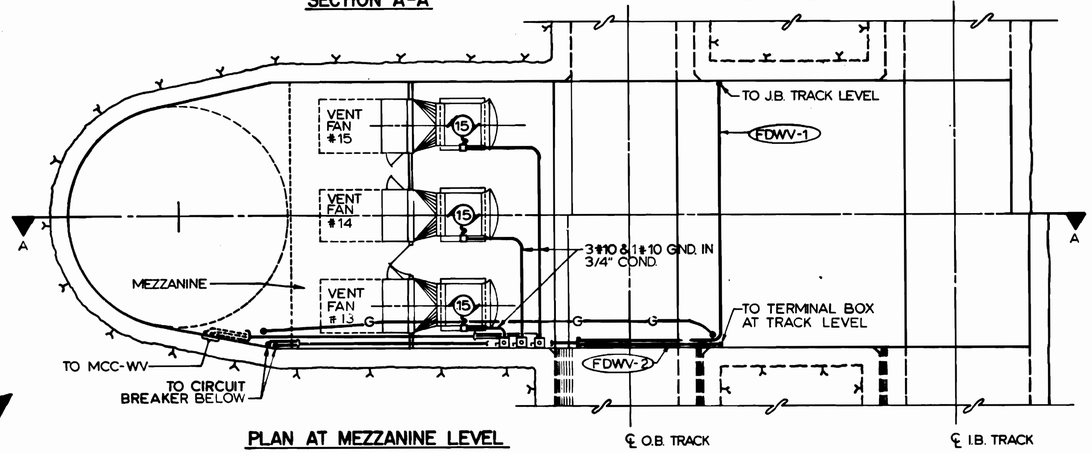

PLAN AT MEZZANINE LEVEL

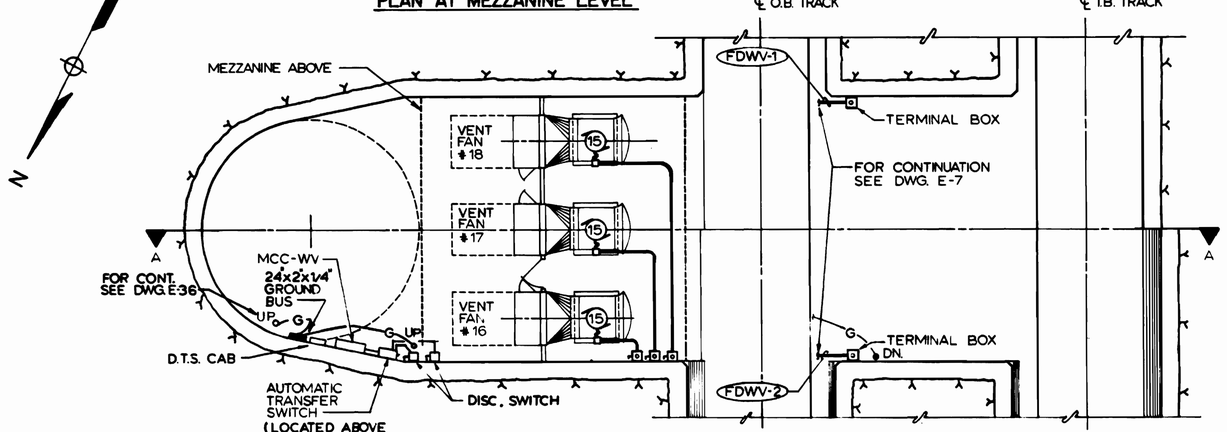

PLAN AT TRACK LEVEL

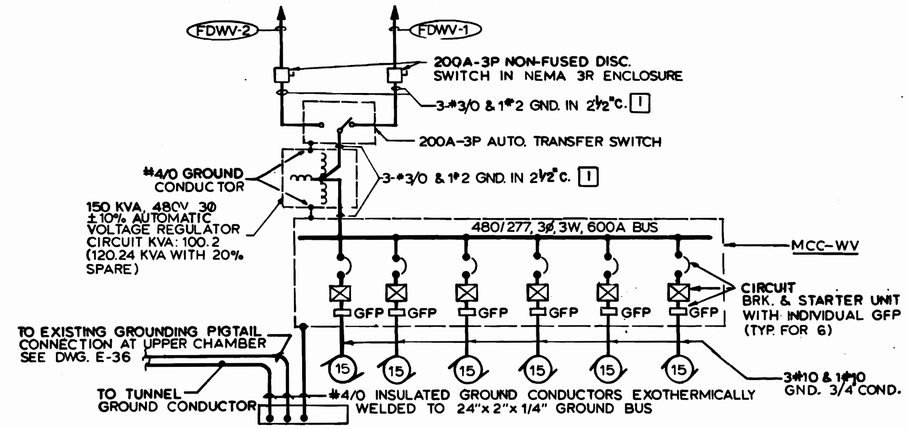

ONE LINE DIAGRAM

MOTOR CONTROL CENTER (MCC-WV)

NOTES:

A. SEE DWGS. E-2 & E-39 FOR SYMBOLS, ABBREVIATIONS AND GENERAL NOTES

B. CIRCUIT BREAKERS INSTALLED IN "MCC-WV" SHALL BE MAGNETIC ONLY INSTANTANEOUS TRIP TYPE. MAGNETIC TRIPS SHALL BE SET TO CARRY MOTOR STARTING LOAD WITHOUT TRIPPING. IN LIEU OF OF CONVENTIONAL THERMAL OVERLOAD RELAYS, THE CIRCUIT BREAKERS SHALL HAVE MAGNETIC CURRENT RELAYS WITH INVERSE TIME DELAY CHARACTERISTICS; THEY SHALL BE ADJUSTED TO TRIP AT FROM 115% TO 125% OF MOTOR FULL LOAD CURRENT.

AS BUILT CONDITION

DESIGNED	P.S. CHU	11-11-74 DATE
DRAWN	C.J. REID	5-1-75 DATE
CHECKED	H.B. ZACKRISON	6-16-80 DATE
APPROVED	H.B. ZACKRISON	6-16-80 DATE

REFERENCE DRAWINGS

NUMBER	DESCRIPTION
S-106	WEST VIRGINIA AVENUE FAN SHAFT STAIRS
M-9	WEST VIRGINIA AVENUE FAN SHAFT PLAN & SECT.

REVISIONS

DATE	BY	DESCRIPTION
9-25-80	H.Z	REVISED ONE-LINE DIAGRAM
7-20-83	MD	1 REV. PER PCO. 79, AS-BUILT

3889-R

WASHINGTON METROPOLITAN AREA TRANSIT AUTHORITY

MATHEWS • CHATELAIN • BEALL
ENGINEERS AND ARCHITECTS
SECTION DESIGNER

SUBMITTED _____ DATE 8-15-80

DE LEUW, CATHER & COMPANY
GENERAL ENGINEERING CONSULTANT

HARRY WEESE & ASSOCIATES
GENERAL ARCHITECTURAL CONSULTANT

APPROVED _____

ROCKVILLE ROUTE
WEST VIRGINIA AVENUE
FAN SHAFT PLAN - POWER

SCALE 1/8" = 1'-0" AND AS NOTED

DRAWING NO. FA11-E-37

M334-184

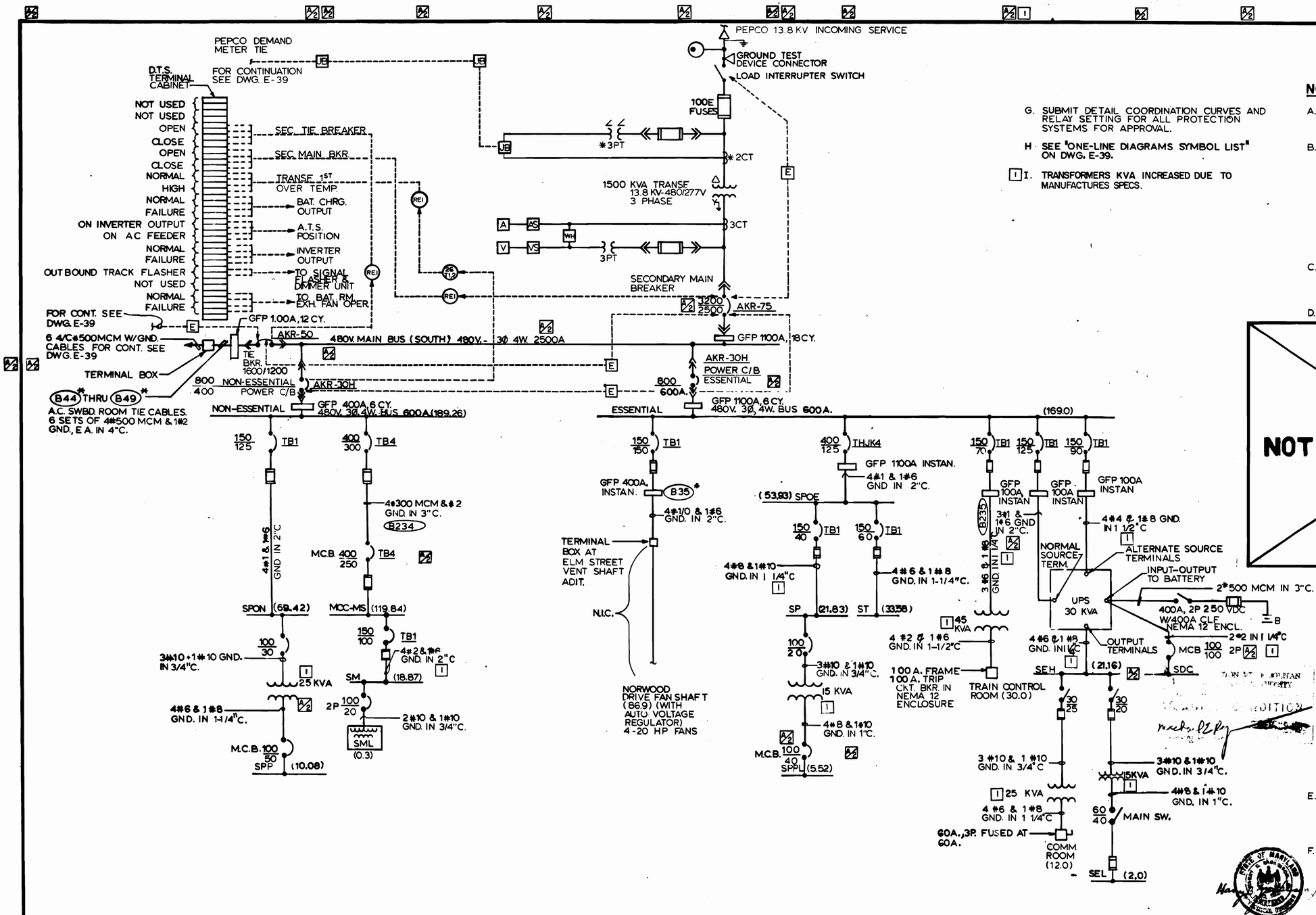

G. SUBMIT DETAIL COORDINATION CURVES AND RELAY SETTING FOR ALL PROTECTION SYSTEMS FOR APPROVAL.

H. SEE "ONE-LINE DIAGRAMS SYMBOL LIST" ON DWG. E-39.

I. TRANSFORMERS KVA INCREASED DUE TO MANUFACTURES SPECS.

NOTES FOR ONE LINE DIAGRAMS

A. NORMAL POSITION OF THE PRIMARY MAIN SWITCH & ALL CKT. BKRS. WITH THE EXCEPTION OF TIE CKT. BKRS. IS CLOSED. THE TIE BREAKERS ARE NORMALLY OPEN.

B. THE FOLLOWING OPERATIONAL INFORMATION SHALL BE FURNISHED TO DTS CABINET:

(1) POSITION OF **SECONDARY MAIN BREAKER AND TIE BREAKERS.**

(2) TRANSFORMER OVER TEMPERATURE DEVICE FIRST STAGE (26T1).

(3) POSITION OR CONDITION OF BATTERY CHARGERS, AUTOMATIC TRANSFER SWITCHES, INVERTERS AND BATTERY ROOM EXHAUST FANS.

C. ALL WIRING FOR SUPERVISORY INDICATION SYSTEM -BETWEEN VARIOUS EQUIPMENT AND DTS CABINET- SHALL BE #14 AWG XHHW INSULATED COPPER WIRES.

D. OPERATION OF PRIMARY SWITCH & SECONDARY BREAKERS.

(1) PRIMARY MAIN SWITCH OPENS UNDER FOLLOWING CONDITIONS.

(a) WHEN THE ASSOCIATED TIME UNDERVOLTAGE/OVERVOLTAGE RELAY IS ACTIVATED OR:

(b) WHEN THE ASSOCIATED PHASE TIME AND INSTANTANEOUS OVERCURRENT OR RESIDUAL GROUND TIME AND INSTANTANEOUS OVER-CURRENT RELAY IS ACTIVATED.

NOT USED

(2) THE OPENING OF THE PRIMARY MAIN SWITCH DUE TO UNDERVOLTAGE/OVERVOLTAGE CONDITIONS ON PEPCO'S FEEDERS WILL AUTOMATICALLY TRIP ITS ASSOCIATED SECONDARY MAIN BREAKER AND TRIP ITS ASSOCIATED NON-ESSENTIAL MAIN FEEDER BREAKER AND ALSO INITIATE THE CLOSING OF THE TIE BREAKERS PROVIDING THE OTHER SECONDARY MAIN BREAKER IS CLOSED.

(3) THE OPENING OF THE PRIMARY MAIN SWITCH DUE TO A BLOWN FUSE SHALL TRIP ITS ASSOCIATED SECONDARY MAIN BREAKER BUT NOT INITIATE THE CLOSING OF THE SECONDARY TIE BREAKERS.

(4) **PROVIDE AN ELECTRICAL INTERLOCK SYSTEM, SO THAT THE PRIMARY MAIN SWITCH CANNOT BE MANUALLY OPENED BEFORE ITS ASSOCIATED SECONDARY MAIN BREAKER IS OPENED.**

(5) PROVIDE AN ELECTRICAL INTERLOCK SYSTEM SO THAT ONLY TWO SECONDARY MAIN BREAKERS OR ONE OF THE SECONDARY MAIN BREAKER AND THE TIE BREAKERS CAN BE CLOSED SIMULTANEOUSLY.

(6) BOTH SECONDARY TIE BREAKERS OPERATE SIMULTANEOUSLY.

(7) ALL BREAKERS ARE CLOSED MANUALLY EXCEPT SECONDARY TIE BREAKERS WHICH ARE CLOSED AUTOMATICALLY.

(8) THE NON-ESSENTIAL MAIN FEEDER BREAKER TRIPS WHEN SECOND STAGE OVER-TEMPERATURE DEVICE (26T2) OF THE ASSOCIATED TRANSFORMER IS ACTIVATED.

E. PROVIDE A SELECTIVE OVER-CURRENT PROTECTION SYSTEM FROM THE **SECONDARY MAIN BRK.** TO FEEDER BREAKER SO THAT ONLY THE PART OF THE ELECTRICAL SYSTEM THAT IS RESPONSIBLE FOR THE OVER-CURRENT IS DISCONNECTED FROM THE SYSTEM.

F. PROVIDE A SELECTIVE GROUND FAULT PROTECTION SYSTEM SO THAT ONLY THE PART OF THE ELECTRICAL SYSTEM THAT IS RESPONSIBLE FOR THE GROUND FAULT IS DISCONNECTED FROM THE SYSTEM. ALSO PROVIDE "GROUND FAULT LIMITER" WHICH SHALL LIMIT THE MAXIMUM ALLOWABLE ENERGY TO 6,000 KW-CYCLE LEVEL.

		DATE
DESIGNED	P.S. CHU	6-18-75
DRAWN	C.W. REID	6-18-75
CHECKED	H.B. ZACKRISON	6-16-80
APPROVED	H.B. ZACKRISON	6-16-80

REFERENCE DRAWINGS

NUMBER	DESCRIPTION

REVISIONS

DATE	BY	DESCRIPTION
9-25-80	H.Z.	GENERAL REVISION
7-11-83	HTN	CORRECTION OF UNDERSIZED CONDUIT PER PCO-79. AS BUILT

WASHINGTON METROPOLITAN AREA TRANSIT AUTHORITY

MATHEWS • CHATELAIN • BEALL
ENGINEERS AND ARCHITECTS
SECTION DESIGNER
SUBMITTED _____ DATE 8-15-80

DE LEUW, CATHER & COMPANY
GENERAL ENGINEERING CONSULTANT

HARRY WEESE & ASSOCIATES
GENERAL ARCHITECTURAL CONSULTANT

APPROVED _____

ROCKVILLE ROUTE
BETHESDA STATION
SOUTH AC SWITCHBOARD ROOM - ONE LINE DIAGRAM

SCALE: NONE
DRAWING NO. FA11-E-38
M334-185

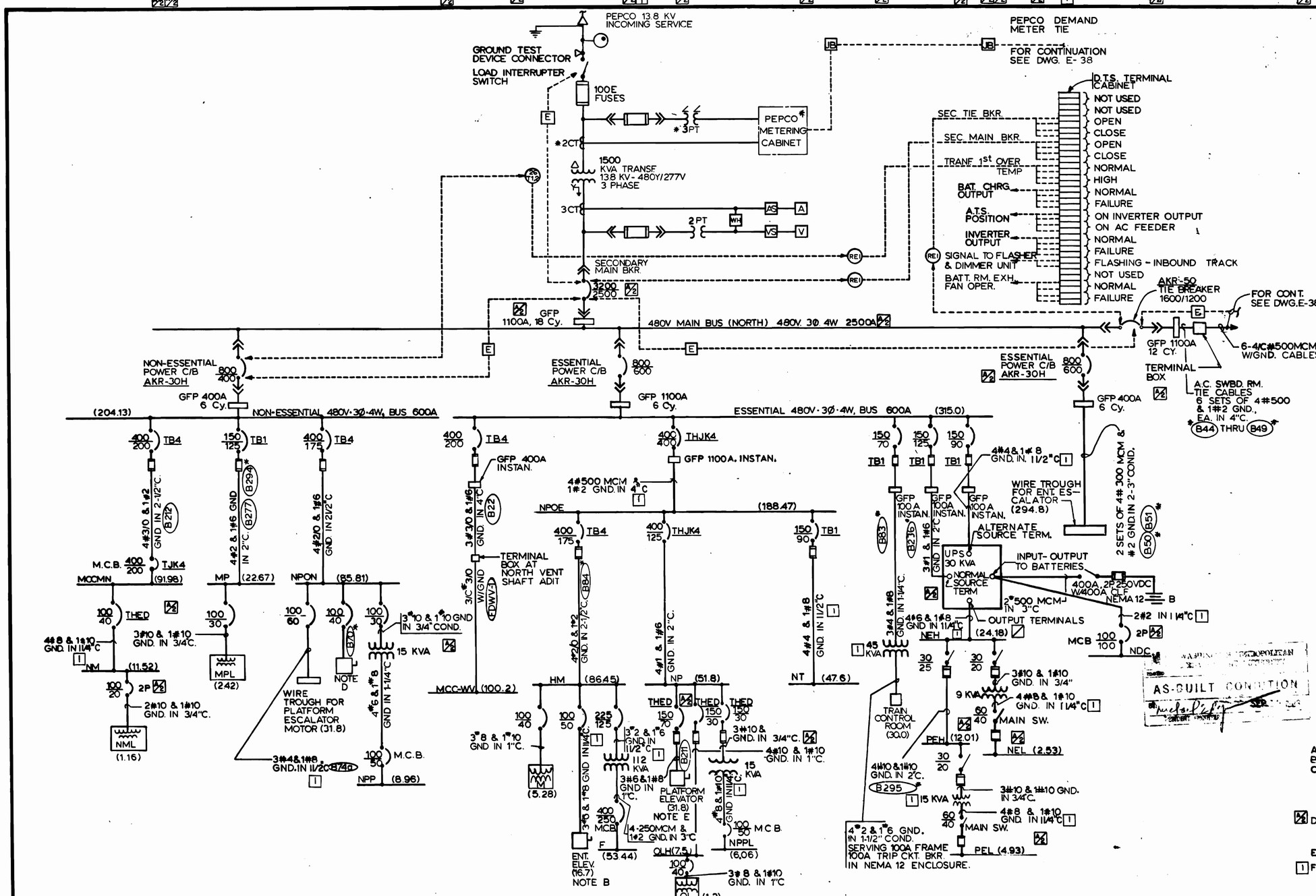

ONE-LINE DIAGRAMS SYMBOL LIST

DEVICE	DESCRIPTION
	TRANSFORMER OVER TEMP. DEVICE- 2 STAGE
THJK4	CKT. BKR. TYPE. SEE NOTE C, THIS DWG.
NEL	LOAD CENTER WITH INTEGRAL TRANSFORMER. SEE LOAD CENTER SCHEDULES FOR RATINGS OF TRANS. AND PRIMARY & SECONDARY MCB
50/51	INSTANEOUS/TIME OVERCURRENT PHASE RELAY
50N/51N	INSTANEOUS/TIME OVERCURRENT GROUND RELAY
86	LOCKOUT RELAY
REI	SUPERVISORY CONTROL INTERPOSING RELAY
A	A.C. AMMETER
V	A.C. VOLTMETER
WH	A.C. WATTHOUR METER
	CURRENT LIMITING FUSE OF STANDARD RATING FOR SPECIFIED CKT. BKR.
E	ELECTRICAL INTERLOCK (KIRK KEY TYPE)
VS AS	PHASE SELECTOR SWITCH
	DRAWOUT CIRCUIT BREAKER 15 KV
	DRAWOUT FUSE
	MOLDED CASE CIRCUIT BREAKER, 3POLE U.O.N. "2P" INDICATES 2POLE CKT. BKR.
	DRAWOUT CIRCUIT BREAKER 600V
CT	CURRENT TRANSFORMER
PT	POTENTIAL TRANSFORMER
3CT	CURRENT TRANSFORMER NUMBER DENOTES QUANTITY
2PT	POTENTIAL TRANSFORMER NUMBER DENOTES QUANTITY
	NEON GLOW TUBE-HIGH VOLTAGE INDICATOR
*	DENOTES EQUIPMENT FURNISHED BY PEPCO AND INSTALLED BY CONTRACTOR
------	DENOTES CONTROL AND SUPERVISORY WIRING
GFP	GROUND FAULT PROTECTION SENSOR
	POT HEAD
	FUSED SWITCH
B	BATTERIES
	SECONDARY TRANSFORMER-DRY TYPE 480V△ PRI-208Y/120V SEC. KVA RATING AS NOTED
225/70	CKT. BKR. FRAME OR SWITCH SIZE, 3Ø CKT. BKR. TRIP OR FUSE RATING, 3Ø
BC	UPS BATTERY CHARGER
	INTEGRALLY FUSED CIRCUIT BREAKER
	LIGHTNING ARRESTOR

NOT USED

NOTES

A. SEE NOTES A THROUGH G ON DWG. E-38.
B. 60A-3P DISC. FUSED AT 50A.
C. FOR PROPER COORDINATION ONLY, CIRCUIT BREAKER TYPES NOTED ON ONE-LINE DIAGRAMS ARE AS MANUFACTURED BY GENERAL ELECTRIC CO.; AND U.O.N. CKT. BKRS. ARE G.E. TYPE "TEB". THIS SHALL NOT BE TAKEN TO PRECLUDE THE USE OF APPROVED EQUAL EQUIPMENT BY OTHER MANUFACTURERS.
D. 60A, 3P. N.I.C. DISCONNECT FOR ENTRANCE ELEVATOR FEEDER. SERVED BY 4#8 & 1#10 GND. IN 2"C. (B70)*
E. 100A, 3P FUSED AT 60A.
F. TRANSFORMERS KVA INCREASED DUE TO MANUFACTURES SPECS.

DESIGNED	P.S. CHU	5-9-75 DATE
DRAWN	C.J. REID	5-16-75 DATE
CHECKED	H.B. ZACKRISON	6-16-80 DATE
APPROVED	H.B. ZACKRISON	6-16-80 DATE

REFERENCE DRAWINGS

NUMBER	DESCRIPTION

REVISIONS

DATE	BY	DESCRIPTION
9-26-80	H.Z.	GENERAL REVISIONS
7-11-83	HTN	1 CORRECTION TO UNDESIZED CONDUIT PER PCO-79, AS BUILT

3888-R STATE OF MARYLAND

WASHINGTON METROPOLITAN AREA TRANSIT AUTHORITY

MATHEWS • CHATELAIN • BEALL
ENGINEERS AND ARCHITECTS
SECTION DESIGNER
SUBMITTED [signature] DATE 8-15-80

DE LEUW, CATHER & COMPANY
GENERAL ENGINEERING CONSULTANT
HARRY WEESE & ASSOCIATES
GENERAL ARCHITECTURAL CONSULTANT
APPROVED [signature]

ROCKVILLE ROUTE
BETHESDA STATION
NORTH AC SWITCHBOARD ROOM - ONE LINE DIAGRAM

SCALE	DRAWING NO.	
NONE	FA11-E-39	M334-186

SOUTH A.C. SWITCHEAR 277/480V - 3Ø - 4W WITH GROUND BUS

CUBICLE	ITEM	CIRCUIT BREAKER POLE	FRAME (AMPS)	OVERCURRENT TRIP DEVICE: TRIP COIL (AMPS)	LONG TIME PICK-UP	LONG TIME TIME DELAY BAND	SHORT TIME PICK-UP	SHORT TIME TIME DELAY BAND	INTERRUPTING CAPACITY (KAMPS) R.M.S. SYM. (AIC) FAULT/RATING	GROUND FAULT PROTECTOR (ZONE PROTECTIVE): PICK-UP (AMPS)	TIME DELAY (I FOR INSTANTANEOUS AND NO. FOR CYCLES)	SERVING (BREAKER TYPES NOTED ARE G.E.)	REMARKS	LOAD: CONNECTED LOAD AMPERES AØ	BØ	CØ	TOTAL (KVA)	DEMAND (KVA) SUMMER	WINTER
SECONDARY MAIN & TIE	A	-	-	-	-	-	-	-	-	-	—	METERING & G.F. RELAYS						-	-
	B	3	3200	2500	100%	INT.	2.5L	MAX	32.6/65	1100A	18	SECONDARY MAIN BKR. AKR-75		1406.91	1386.87	1339.54	1151.28	1072.72	1016.45
	C	3	1600	1200	100%	INT.	3L	INT.	32.6/50	1100A	12	TIE CIRCUIT AKR-50	ESS. LOAD OF NORTH 480V SWBD. (INCLUDING ENTRANCE ESCALATOR)	875.8	844.19	823.74	711.34	662.77	654.07
FEEDER MAIN	D	-	-	-	-	-	-	-	-	-	-	GROUND FAULT RELAYS							
	E	3	800	600	100%	MAX.	4L	MIN.	32.6/42	1100A	6	ESSENTIAL MAIN AKR-30H		268.39	279.0	254.0	221.99	221.99	221.99
	F	3	800	400	80%	INT.	6L	MIN.	32.6/42	400A	6	NON-ESSENTIAL MAIN AKR-30H		271.66	273.32	271.44	225.96	187.96	144.39
	G											BUSSED SPACE							

CUBICLE	ITEM	CIRCUIT BREAKER POLE	FRAME (AMPS)	TRIP COIL (AMPS)	CURRENT LIMITING FUSES: LIMITER SIZE	G.E. BREAKER TYPE	AIC SYM. R.M.S. FAULT RATE	INSTANTANEOUS PICK-UP	GROUND FAULT PROTECTOR (ZONE PROTECTIVE): PICK-UP (AMPS)	TIME DELAY (I FOR INSTANTANEOUS AND NO. FOR CYCLES)	SERVING	REMARKS	LOAD: CONNECTED LOAD AMPERES AØ	BØ	CØ	TOTAL (KVA)	DEMAND (KVA) SUMMER	WINTER
POWER SWITCHBOARD ESSENTIAL	1	3	400A	125A	—	THJK4	32.6/35	HIGH	1100A	I	DISTRIBUTION PANEL "SPOE"		63.25	75.88	55.56	53.93	53.93	53.93
	2	3	150A	90A	STANDARD	TB1	32.6/200	HIGH	100A		EMERGENCY PANEL "SEH"	30 KW UPS ALTERNATE SOURCE	28.37	26.35	21.67	21.16	21.16	21.16
	3	3	150A	125		TB1	32.6/200	HIGH	100A	I	UPS-BATTERY CHARGER	UPS-NORMAL SOURCE	36.1	36.1	36.1	30.0	30.0	30.0
	4	3	150A	70A		TB1	32.6/200	HIGH	100A	I	30KVA TRANSFORMER	FEEDS TRAIN CONTROL ROOM	36.1	36.1	36.1	30.0	30.0	30.0
	5	3	150A	150A		TB1	32.6/200	HIGH	400A	I	NORWOOD DRIVE FAN SHAFT		104.57	104.57	104.57	86.9	86.9	86.9
												ESSENTIAL LOAD TOTAL	268.39	279.0	254.0	221.99	221.99	221.99
POWER SWITCHBOARD NON-ESSENTIAL	6	3	400	300A	STANDARD	TB4	32.6/200	MEDIUM	-	-	MCC-MS		187.04	187.04	187.04	155.24	119.84	74.97
	7	3	150A	125A		TB1	32.6/200	HIGH	-	-	DISTRIBUTION PANEL "SPON"		84.62	86.28	84.4	70.72	68.12	69.42
	8																	
	9																	
	10																	
												NON-ESS. LOAD TOTAL	271.66	273.32	271.44	225.96	187.96	144.39

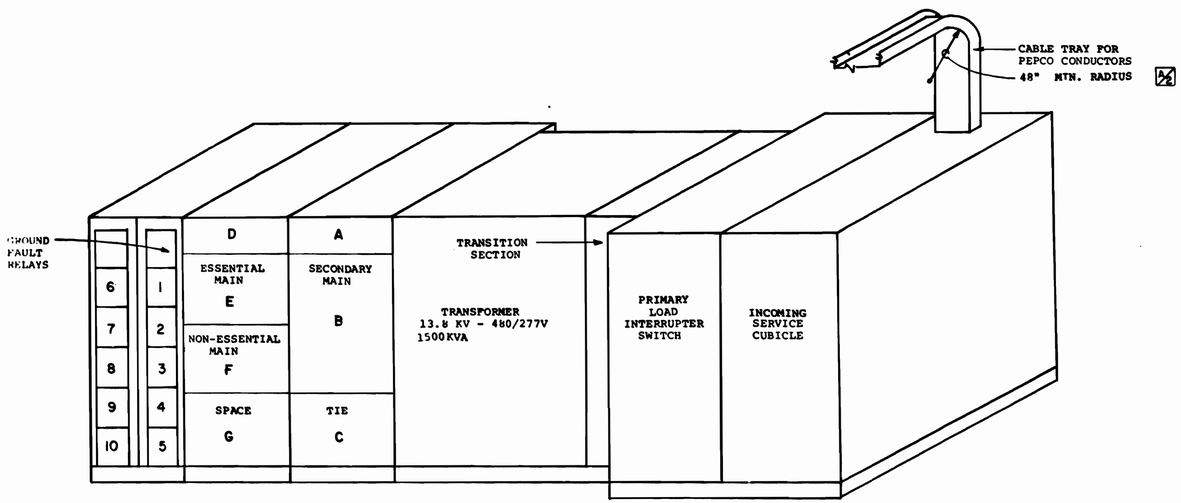

ELEVATION OF SOUTH A.C. SWITCHGEAR
SCALE: 1/2"=1'-0"

NOTES

A. FOR PURPOSES OF PROPER DESIGN COORDINATION, ALL BREAKER TYPES AND CHARACTERISTICS NOTED ARE THOSE OF THE GENERAL ELECTRIC COMPANY. THIS SHALL NOT BE TAKEN TO PRECLUDE THE USE OF APPROVED EQUAL EQUIPMENT BY OTHER MANUFACTURERS.

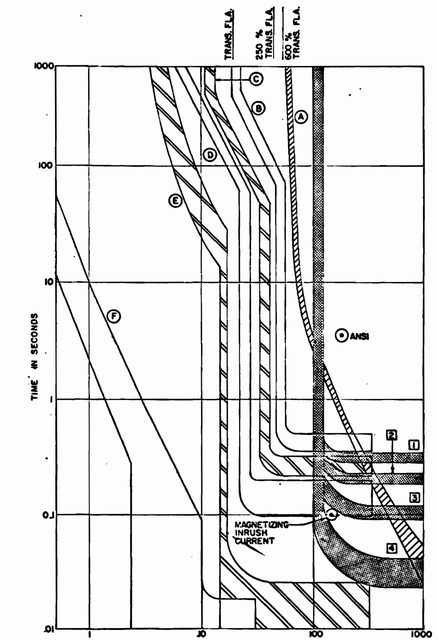

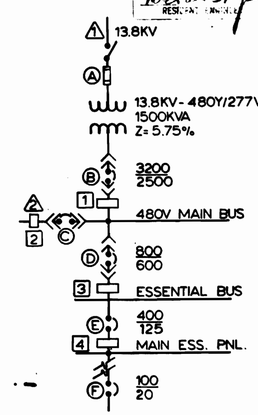

LEGEND

(A) PRIMARY FUSED INTERRUPTER SWITCH S & C SMU-20 WITH 100E STANDARD SPEED FUSES.

(B) SECONDARY MAIN BREAKER. G.E. TYPE AKR-75 ECS 2,500A COIL. L.T. 1.0X INT. BAND. S.T. 2.5L MAX. BAND.

(C) TIE BREAKER. G.E. TYPE AKR-50 ECS 1200A COIL. L.T. 1.0X INT. BAND. S.T. 3L INT. BAND.

(D) ESSENTIAL MAIN BREAKER. G.E. TYPE AKR-30H ECS 600A COIL. L.T. 1.0X MAX. BAND. S.T. 4L MIN. BAND.

(E) ESSENTIAL FEEDER BKR. G.E. TYPE THJK-4 125A COIL. L.T. NON-ADJUSTABLE INSTANT. 5X (POINT 3)

(F) BRANCH BREAKER. G.E. TYPE TED 20A COIL. L.T. & INSTANT. NON-ADJ.

[1] G.E. TYPE TGSR GROUND BREAK ZONE PROTECTIVE. 1100A 0.3 SECOND.

[2] SAME AS "1" ABOVE 1100A 0.2 SECOND

[3] SAME AS "1" ABOVE 1100A 0.1 SECOND.

[4] SAME AS "1" ABOVE 1100A 0.03 SECOND

SYSTEM COORDINATION - SHOWING CHAIN OF ESSENTIAL DEVICES
(GENERAL ELECTRIC CURVES USED FOR CLARIFICATION ONLY)

DESIGNED	B. STAUFFER	2-15-79 DATE
DRAWN	D. JACKSON	10-8-79 DATE
CHECKED	H.B. ZACKRISON	6-16-80 DATE
APPROVED	H.B. ZACKRISON	6-16-80 DATE

REFERENCE DRAWINGS

NUMBER	DESCRIPTION

REVISIONS

DATE	BY	DESCRIPTION
9-25-80	H.Z.	REVISED SWGR. SCHEDULE & ELEV.

3889-R STATE OF MARYLAND

WASHINGTON METROPOLITAN AREA TRANSIT AUTHORITY

MATHEWS • CHATELAIN • BEALL
ENGINEERS AND ARCHITECTS
SECTION DESIGNER

SUBMITTED DATE 8-15-80

DE LEUW, CATHER & COMPANY
GENERAL ENGINEERING CONSULTANT

HARRY WEESE & ASSOCIATES
GENERAL ARCHITECTURAL CONSULTANT

APPROVED

ROCKVILLE ROUTE
BETHESDA STATION
SOUTH A.C. SWITCHGEAR SCHEDULE

SCALE NONE | DRAWING NO. FAII-E-139 | M334-187

NORTH A.C. SWITCHGEAR 277/480V - 3Ø - 4W WITH GROUND BUS

CUBICLE	ITEM	CIRCUIT BREAKER: POLE	FRAME (AMPS)	OVERCURRENT TRIP DEVICE: TRIP COIL (AMPS)	LONG TIME: PICK-UP	LONG TIME: TIME DELAY BAND	SHORT TIME: PICK-UP	SHORT TIME: TIME DELAY BAND	INTERRUPTING CAPACITY (KAMPS) R.M.S. SYM. (AIC) FAULT/RATING	GROUND FAULT PROTECTOR (ZONE PROTECTIVE): PICK-UP (AMPS)	TIME DELAY (I FOR INSTANTANEOUS AND NO. FOR CYCLES)	SERVING	REMARKS (BREAKER TYPES NOTED ARE G.E.)	LOAD: CONNECTED LOAD AMPERES AØ	BØ	CØ	TOTAL (KVA)	DEMAND (KVA) SUMMER	WINTER
SECONDARY MAIN & TIE	A	–	–	–	–	–	–	–	–	–	–	METERING & G.F. RELAYS							
	B	3	3200	2500A	100%	INT.	2.5L	MAX	32.6/ 65	1100A	18	SECONDARY MAIN		1465.04	1441.14	1380.04	1193.75	1082.7	1052.22
	C	3	1600	1200A	100%	INT.	3L	INT.	32.6/ 50	1100A	12	TIE CIRCUIT AKR-50	ESS. LOAD OF SOUTH 480V SWBD.	268.39	279.0	254.0	221.99	221.99	221.99
FEEDER MAIN	D	—	—	—	—	—	—	—	—	—	—	GROUND FAULT RELAYS							
	E	3	800A	600A	100%	MAX.	4L	MIN.	32.6/ 42	1100A	6	ESSENTIAL MAIN AKR-30H		481.6	449.99	429.54	383.74	367.93	359.23
	F	3	800A	400A	100%	MAX.	4L	MIN.	32.6/ 42	400A	6	NON-ESSENTIAL MAIN AKR-30H		320.34	317.95	302.3	260.42	197.94	176.16
	G	3	800A	600A	80%	MIN.	5L	MIN.	32.6/ 42	400A	6	ENTRANCE ESCAL. MOTOR LOAD	AKR-30H ESSENTIAL LOAD	394.2	394.2	394.2	327.6	294.84	294.84

CUBICLE	ITEM	CIRCUIT BREAKER: POLE	FRAME (AMPS)	TRIP COIL (AMPS)	CURRENT LIMITING FUSES: LIMITER SIZE	G.E. BREAKER TYPE	AIC SYM R.M.S. FAULT/RATING	INSTANTANEOUS PICK-UP	GROUND FAULT PROTECTOR (ZONE PROTECTIVE): PICK-UP (AMPS)	TIME DELAY (I FOR INSTANTANEOUS AND NO. FOR CYCLES)	SERVING	REMARKS	LOAD: CONNECTED LOAD AMPERES AØ	BØ	CØ	TOTAL (KVA)	DEMAND (KVA) SUMMER	WINTER
POWER SWITCHBOARD ESSENTIAL	1	3	400A	300A	—	THJK4	32.6/35	MEDIUM	1100A	I	DISTRIBUTION PANEL "NPOE"		263.2	232.45	219.8	198.18	188.47	179.77
	2	3	150A	90A	STANDARD	TB1	32.6/200	HIGH	100A	I	EMERGENCY PANEL "NEH"	30 KW UPS ALTERNATE SOURCE	25.63	24.77	16.97	19.26	19.26	19.26
	3	3	150A	125A		TB1	32.6/200	HIGH	100A	I	UPS-BATTERY CHARGER	UPS NORMAL SOURCE	36.1	36.1	36.1	30.0	30.0	30.0
	4	3	400A	200A		TB4	32.6/200	MEDIUM	400A	I	WEST VIRGINIA AVE. FAN SHAFT	6-15 HP	120.57	120.57	120.57	100.2	100.2	100.2
	5	3	150A	70A		TB1	32.6/200	HIGH	100A	I	30KVA TRANSFORMER	FEEDS TRAIN CONTROL ROOM	36.1	36.1	36.1	30.0	30.0	30.0
												ESSENTIAL LOAD TOTAL	481.6	449.99	429.54	383.74	367.93	359.23
POWER SWITCHBOARD NON-ESSENTIAL	6	3	400A	200A	STANDARD	TB4	32.6/200	MEDIUM	—	—	MCC-MN		128.9	128.9	128.9	106.98	91.98	67.68
	7	3	150A	125A		TB1	32.6/200	HIGH	—	—	DISTRIBUTION PANEL "NPON"		115.7	109.7	108.5	92.5	85.31	85.81
	8	3	150A	125A		TB1	32.6/200	HIGH	—	—	PANEL "MP"		75.74	79.35	64.9	60.94	20.65	22.67
	9																	
	10																	
												NON-ESS. LOAD TOTAL	320.34	317.95	302.3	260.42	197.94	176.16

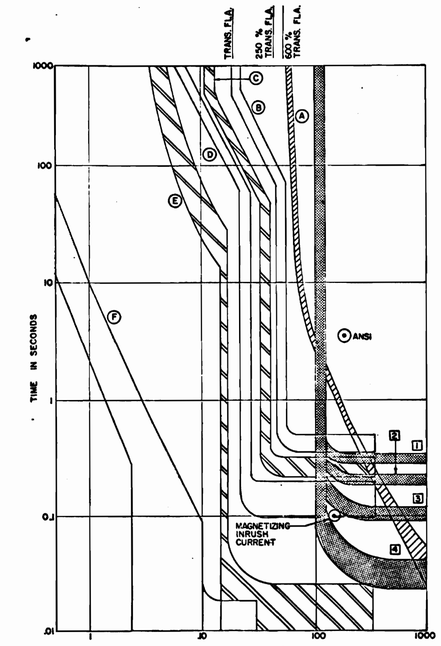

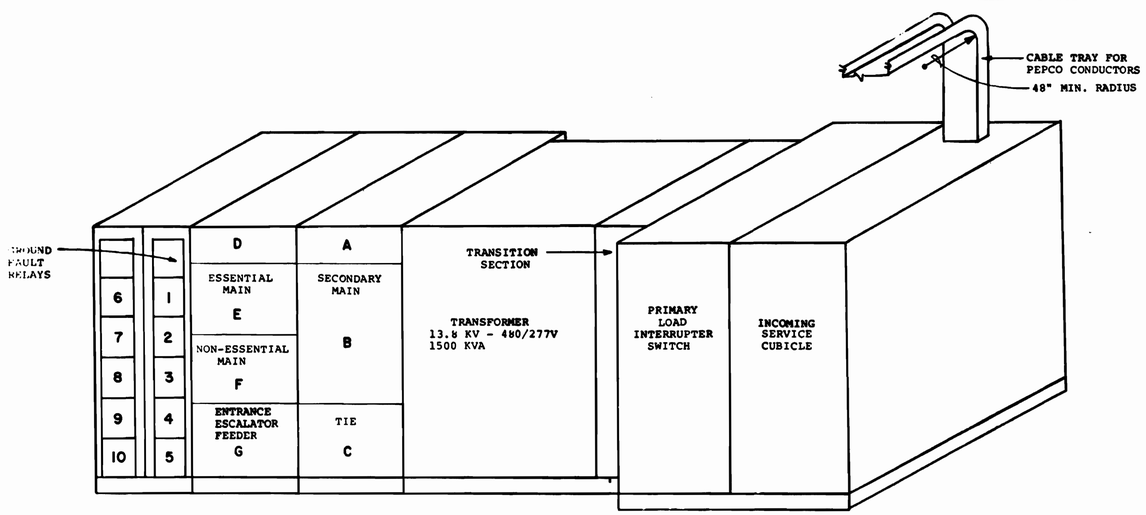

ELEVATION OF NORTH A.C. SWITCHGEAR
SCALE: 1/2"=1'-0"

NOTES

A. FOR PURPOSES OF PROPER DESIGN COORDINATION, ALL BREAKER TYPES AND CHARACTERISTICS NOTED ARE THOSE OF THE GENERAL ELECTRIC COMPANY. THIS SHALL NOT BE TAKEN TO PRECLUDE THE USE OF APPROVED EQUAL EQUIPMENT BY OTHER MANUFACTURERS.

WASHINGTON METROPOLITAN AREA TRANSIT AUTHORITY
AS-BUILT CONDITION
BY
DATE

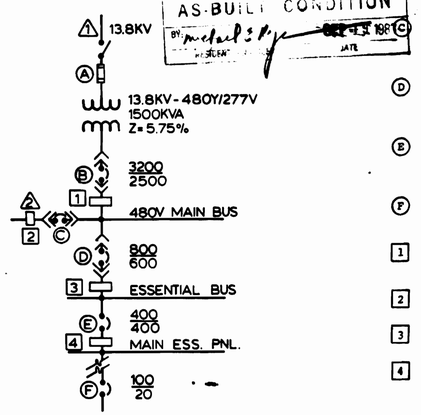

LEGEND

- (A) PRIMARY FUSED INTERRUPTER SWITCH S & C SMU-20 WITH 100E STANDARD SPEED FUSES.
- (B) SECONDARY MAIN BREAKER. G.E. TYPE AKR-75 ECS 2,500A COIL. L.T. 1.0X INT. BAND. S.T. 2.5L MAX. BAND.
- (C) TIE BREAKER. G.E. TYPE AKR-50 ECS 1200A COIL. L.T. 1.0X INT. BAND. S.T. 3L INT. BAND.
- (D) ESSENTIAL MAIN BREAKER. G.E. TYPE AKR-30H ECS 600A COIL. L.T. 1.0X MAX. BAND. S.T. 4L MIN. BAND.
- (E) ESSENTIAL FEEDER BKR. G.E. TYPE THJK-4 400A COIL. L.T. NON-ADJUSTABLE INSTANT. 5X (POINT 3).
- (F) BRANCH BREAKER. G.E. TYPE TED 20A COIL. L.T. & INSTANT. NON-ADJ.
- [1] G.E. TYPE TGSR GROUND BREAK ZONE PROTECTIVE. 1100A 0.3 SECOND.
- [2] SAME AS "1" ABOVE 1100A 0.2 SECOND
- [3] SAME AS "1" ABOVE 1100A 0.1 SECOND.
- [4] SAME AS "1" ABOVE 1100A 0.03 SECOND

SYSTEM COORDINATION-SHOWING CHAIN OF ESSENTIAL DEVICES

(GENERAL ELECTRIC CURVES USED FOR CLARIFICATION ONLY)

DESIGNED	B. STAUFFER	2-15-79 DATE
DRAWN	D. JACKSON	10-8-79 DATE
CHECKED	H.B. ZACKRISON	6-16-80 DATE
APPROVED	H.B. ZACKRISON	6-16-80 DATE

REFERENCE DRAWINGS

NUMBER	DESCRIPTION

REVISIONS

DATE	BY	DESCRIPTION
9-25-80	H.Z.	REVISED SWITCHGEAR SCHEDULE

2669-R

WASHINGTON METROPOLITAN AREA TRANSIT AUTHORITY

MATHEWS • CHATELAIN • BEALL
ENGINEERS AND ARCHITECTS
SECTION DESIGNER

SUBMITTED Jerilyn R. Fryer DATE 8-15-80

DE LEUW, CATHER & COMPANY
GENERAL ENGINEERING CONSULTANT

HARRY WEESE & ASSOCIATES
GENERAL ARCHITECTURAL CONSULTANT

APPROVED

ROCKVILLE ROUTE
BETHESDA STATION
NORTH A.C. SWITCHGEAR SCHEDULE

SCALE NONE | DRAWING NO. FAII-E-239 | M334-188

MOTOR CONTROL CENTER MCC-MN (NON-ESSENTIAL)
600 AMPS 480V 3ø 4W WITH GROUND BUS
BUS BRACING 42,000A RMS, SYM.

LOCATION: NORTH MECHANICAL ROOM-MEZZANINE
AVAILABLE SHORT CIRCUIT CURRENT 23,600A RMS. SYM.
ENCLOSURE TYPE: NEMA 12 BOTTOM FEED

SEC. NO.	ITEM NO.	COMBINATION BREAKER / STARTER POLES	FRAME	TRIP	NEMA SIZE	TYPE	CONNECTED LOAD (KVA)	H.P. OR K.W.	DESCRIPTION	CIRCUIT BREAKER TYPE
A	1	3	150A	40A	-	-	19.02	-	SUBFEED PANEL "NM"	THED
	2			40A	2	FVNR	16.7	15	VU #1 (INCLUDING 1/4 HP FILTER)	
	3			40A	2	FVR 1	16.7	15	FAN #1	
	4		400A	200A	-	-	-	-	MAIN CIRCUIT BREAKER	TJK4
B	1	3	-	-	-	-	-	-	BUSSED SPACE	
	2		150A	20A	1	FVR	6.06	5	FAN #3	THED
	3			40A	2	FVNR	-	-	SPARE	
	4			40A	2	FVNR	16.7	15	VU #2 (INCLUDING 1/4 HP FILTER)	
	5			70A	3		31.8	30	ACU #1 (INCLUDING 1/4 HP FILTER)	
						TOTAL	106.98	128.9A		

ELEVATION

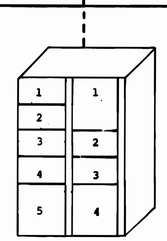

ESTIMATED DEMAND:

LOAD	K.V.A. CONNECTED	DF	SUMMER	WINTER
VENTILATION	56.16	1.0	56.16	56.16
COOLING MOTORS	31.8	1.0	31.8	
PANEL "NM"	19.02		4.02	11.52
TOTAL DEMAND:			91.98	67.68

MOTOR CONTROL CENTER MCC-WV (ESSENTIAL)
600 AMPS. 480V 3ø 3W WITH GROUND BUS
BUS BRACING: 22,000A RMS, SYM.

LOCATION: WEST VIRGINIA AVENUE FAN SHAFT
AVAILABLE SHORT CIRCUIT CURRENT 1,400A RMS. SYM.
ENCLOSURE TYPE: NEMA 12 TOP FEED

SEC. NO.	ITEM NO.	COMBINATION BREAKER / STARTER POLES	FRAME	TRIP	NEMA SIZE	TYPE	CONNECTED LOAD (KVA)	H.P. OR K.W.	DESCRIPTION	CIRCUIT BREAKER TYPE
A	1	3	100A	40A	2	FVR	16.7	15HP	VENT FAN	TEB
	2									
	3									
B	1	3	100A	40A	2	FVR	16.7	15HP	VENT FAN	TEB
	2									
	3									
						TOTAL	100.2	120.72A		

ELEVATION

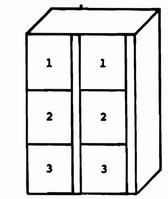

NOTE: CIRCUIT BREAKERS SHALL BE MAGNETIC TRIP TYPE ONLY. SEE ONE-LINE DIAGRAM DWG. E-37 FOR ADDITIONAL INFORMATION ON CIRCUIT BREAKERS AND GROUND FAULT PROTECTION.

ESTIMATED DEMAND:

LOAD	K.V.A. CONNECTED	DF	SUMMER	WINTER
VENTILATION	100.2	1.0	100.2	100.2
COOLING: MOTORS				
HEATING				
TOTAL DEMAND:			100.2	100.2

MOTOR CONTROL CENTER MCC-MS (NON-ESSENTIAL)
600 AMPS 480V 3ø 4W WITH GROUND BUS
BUS BRACING 42,000A RMS. SYM.

LOCATION: SOUTH MECHANICAL ROOM-MEZZANINE
AVAILABLE SHORT CIRCUIT CURRENT 29,200A RMS. SYM.
ENCLOSURE TYPE: NEMA 12 BOTTOM FEED

SEC. NO.	ITEM NO.	COMBINATION BREAKER / STARTER POLES	FRAME	TRIP	NEMA SIZE	TYPE	CONNECTED LOAD (KVA)	H.P. OR K.W.	DESCRIPTION	CIRCUIT BREAKER TYPE
A	1	3	150A	100A	-	-	54.27	-	SUBFEED PANEL "SM"	TB1
	2			40A	2	FVNR	16.7	15	VU #3 (INCLUDING 1/4 HP FILTER)	
	3			40A	2	FVR 1	16.7	15	FAN #2	
	4			40A	2	FVNR 1	-	-	SPARE	
	5		400A	300A	-	-	-	-	MAIN CIRCUIT BREAKER	TB4
B	1	3	150A	20A	1	FVR	6.06	5	FAN #4	TB1
	2			15A	1	FVNR	3.41	2	ACU #4 (INCLUDING 1/4 HP FILTER)	
	3			40A	2		16.7	15	VU #4	
	4			100A	3		41.4	40	ACU #2	
						TOTAL	155.24	187.04A		

ELEVATION

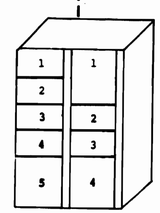

ESTIMATED DEMAND:

LOAD	K.V.A. CONNECTED	DF	SUMMER	WINTER
VENTILATION	56.16	1.0	56.16	56.16
COOLING MOTORS	44.81	1.0	44.81	
PANEL "SM"	54.27		18.87	18.81
TOTAL DEMAND:			119.84	74.97

MOTOR CONTROL CENTER MCC-CH (NON-ESSENTIAL)
600 AMPS. 480V 3ø 4W WITH GROUND BUS
BUS BRACING: 22,000A RMS. SYM.

LOCATION: CHILLER PLANT
AVAILABLE SHORT CIRCUIT CURRENT 15,500A RMS. SYM.
ENCLOSURE TYPE: NEMA 12 TOP FEED

SEC. NO.	ITEM NO.	COMBINATION BREAKER / STARTER POLES	FRAME	TRIP	NEMA SIZE	TYPE	CONNECTED LOAD (KVA)	H.P. OR K.W.	DESCRIPTION	CIRCUIT BREAKER TYPE
A	1	3	400A	300A	-	-	-	-	MAIN CIRCUIT BREAKER	TJK4
	2		150A	100A	3	FVNR	41.4	40HP	COOLING TOWER	THED
	3			70A	3		31.8	30HP	CHILLED WATER PUMP	
B	1	3	150A	50A	2	FVNR	27.0	25HP	CONDENSER WATER PUMP	THED
	2			40A	2		11.15	10HP	VU #5 (INCLUDING 1/4 HP FILTER)	
	3			40A	2		11.15	10HP	VU #6	
	4			60A	-	-	39.39	-	SUBFEED PANEL "CP"	
	5			40A	2	FVNR	-	-	SPARE	
	6			20A	1		6.06	TWO 5HP	DUAL COMPRESSOR (NON-COINCIDENTAL LOAD)	
						TOTAL	167.95	202.35A		

ELEVATION

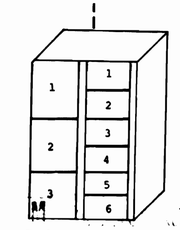

AS BUILT CONDITION
RESIDENT ENGINEER

ESTIMATED DEMAND:

LOAD	K.V.A. CONNECTED	DF	SUMMER	WINTER
VENTILATION	22.3	1.0	22.3	22.3
COOLING MOTORS	106.26	1.0	106.26	
PANEL "CP"	39.39		29.39	34.39
TOTAL DEMAND:			157.95	56.69

NOTES

A. FOR PURPOSES OF PROPER DESIGN COORDINATION, ALL BREAKER TYPES AND CHARACTERISTICS NOTED ARE THOSE OF THE GENERAL ELECTRIC COMPANY. THIS SHALL NOT BE TAKEN TO PRECLUDE THE USE OF APPROVED EQUAL EQUIPMENT BY OTHER MANUFACTURERS.

DESIGNED	B. STAUFFER	2-15-79 DATE
DRAWN	J. LEDFORD	3-1-79 DATE
CHECKED	H.B. ZACKRISON	6-16-80 DATE
APPROVED	H.B. ZACKRISON	6-16-80 DATE

REFERENCE DRAWINGS

NUMBER	DESCRIPTION

REVISIONS

DATE	BY	DESCRIPTION
9-25-80	H.Z.	GENERAL REVISION
7-11-83	HTN	1 REVERSIBLE FAN STARTERS PER PCO-4, AS-BUILT

REGISTERED ARCHITECT 3889-R STATE OF MARYLAND

WASHINGTON METROPOLITAN AREA TRANSIT AUTHORITY

MATHEWS • CHATELAIN • BEALL
ENGINEERS AND ARCHITECTS
SECTION DESIGNER
SUBMITTED [signature] DATE 8-15-80

DE LEUW, CATHER & COMPANY
GENERAL ENGINEERING CONSULTANT

HARRY WEESE & ASSOCIATES
GENERAL ARCHITECTURAL CONSULTANT
APPROVED [signature]

ROCKVILLE ROUTE
BETHESDA STATION
MOTOR CONTROL CENTER SCHEDULES

SCALE NONE | DRAWING NO. FAII-E-40 | M334-189

PANEL NO. SPOE (ESSENTIAL)
TYPE: DISTRIBUTION 480/277V 3Ø 4W WITH GROUND BUS
LOCATION: SOUTH AC SWBD. RM.
MAIN: LUGS ONLY 225A
PANEL MOUNTING: SURFACE TOP FEED

CKT. NO.	CIRCUIT BREAKER POLES	FRAME	TRIP	AIC	CONNECTED LOAD (KVA) AØ	BØ	CØ	H.P.	DESCRIPTION
1	3	150A	40A	200K	6.22	10.62	4.99	—	SUBFEED TO PANEL 'SP'
2			40A		11.3	10.4	10.4	—	SUBFEED TO PANEL 'ST'
3			20A						SPARE
4			20A						SPARE
5			—	—					BUSSED SPACE
6			—	—					BUSSED SPACE
7									
8									
9									
10									
11									
12									
					17.52	21.02	15.39		

CONNECTED LOAD: AØ 17.52 KVA 63.25A
BØ 21.02 KVA 75.88A
CØ 15.39 KVA 55.56A
TOTAL: 53.93 KVA

ESTIMATED DEMAND LOAD: 53.93 KVA
SUMMER OR WINTER

PANEL NO. NPON (NON-ESSENTIAL)
TYPE: DISTRIBUTION 480/277 3Ø 4W WITH GROUND BUS
LOCATION: NORTH AC SWBD. RM.
MAIN: LUGS ONLY 225A
PANEL MOUNTING: SURFACE TOP FEED

CKT. NO.	CIRCUIT BREAKER POLES	FRAME	TRIP	AIC	CONNECTED LOAD (KVA) AØ	BØ	CØ	H.P.	DESCRIPTION
1	3	100A	60A	14,000	10.6	10.6	10.6	2-15	PLATFORM ESCALATOR NO. 1 & 2 MOTOR FEEDER
2			20A		3.36	3.36	3.36		NORTH TUNNEL O.B. - NON. ESS. FEEDER (FBNP-O.B.)
3			20A		3.36	3.36	3.36		NORTH TUNNEL I.B. - NON. ESS. FEEDER (FBNP-I.B.)
4			30A		4.38	2.7	2.38		SUBFEED TO PANEL 'NPP'
5			40A		10.36	10.36	10.36		EXTERIOR ESCALATOR FEEDER
6			20A						SPARE
7									BUSSED SPACE
8									BUSSED SPACE
9									
10									
11									
12									
					32.06	30.38	30.06		

CONNECTED LOAD: AØ 32.06 KVA 115.7A
BØ 30.38 KVA 109.7A
CØ 30.06 KVA 108.5A
TOTAL: 92.5 KVA

ESTIMATED DEMAND LOAD

ITEM	CONN. LOAD	D.F.	SUMMER	WINTER
ESCAL.	62.88	0.9	56.69	56.69
NPP	9.46		8.46	8.96
MISC.	20.16	1.0	20.16	20.16
	92.5		85.31	85.81

PANEL NO. CP (NON-ESSENTIAL)
TYPE: LIGHTING & APPLIANCE 480/277V 3Ø 4W WITH GROUND BUS
LOCATION: CHILLER PLANT
MAIN: LUGS ONLY 100A
PANEL MOUNTING: SURFACE TOP FEED

CKT. NO.	CIRCUIT BREAKER POLES	FRAME	TRIP	AIC	CONNECTED LOAD (KVA) AØ	BØ	CØ	H.P.	DESCRIPTION
1	3	100A	50A	25,000	7.05	7.05	7.05		SUBFEED PANEL "CPL"
2	2		20A						BUSSED SPACE
3	1					1.0			PIPE HEATING CABLE
4	3				1.67	1.67	1.67		FEEDER TO N.I.C. UPS
5	3				1.67	1.67	1.67		UNIT HEATER #8 5KW
6					1.67	1.67	1.67		UNIT HEATER #7 5KW
7			15A		0.37	0.37	0.37	1	FAN #15
8					0.37	0.37	0.37	1	FAN #16
9			20A						SPARE
10			—	—					BUSSED SPACE
11			—	—					BUSSED SPACE
12									
					12.8	13.8	12.8		

CONNECTED LOAD: AØ 12.8 KVA 46.2A
BØ 13.8 KVA 49.8A
CØ 12.8 KVA 46.2A
TOTAL: 39.4 KVA

ESTIMATED DEMAND LOAD

ITEM	CONNECTED LOAD	D.F.	SUMMER	WINTER
HTG.	10.0	0.5		5.0
MISC.	29.4	1.0	29.4	29.4
	39.4		29.4	34.4

PANEL NO. NPOE (ESSENTIAL)
TYPE: DISTRIBUTION 480/277V 3Ø 4W WITH GROUND BUS
LOCATION: NORTH AC SWBD. RM.
MAIN: LUGS ONLY 400A
PANEL MOUNTING: SURFACE TOP FEED

CKT. NO.	CIRCUIT BREAKER POLES	FRAME	TRIP	AIC	CONNECTED LOAD (KVA) AØ	BØ	CØ	H.P.	DESCRIPTION
1	3	400A	175A	200K	33.65	29.66	29.7	—	SUBFEED TO PANEL 'HM'
2		400A	125A	35,000	19.95	18.83	16.19	—	SUBFEED TO PANEL 'NP'
3		150A	90A	200K	16.7	15.9	15.0	—	SUBFEED TO PANEL 'NT'
4	2		20A	35,000	2.6	1.2	—		TPSS ESSENTIAL LIGHTING FEEDER
5	1		20A						SPARE
6	3		20A						SPARE
7	3		—	—					BUSSED SPACE
8	3		—	—					BUSSED SPACE
9	3		—	—					BUSSED SPACE
10									
11									
12									
					72.9	64.39	60.89		

CONNECTED LOAD: AØ 72.9 KVA 263.2A
BØ 64.39 KVA 232.45A
CØ 60.89 KVA 219.8A
TOTAL: 198.18 KVA

ESTIMATED DEMAND LOAD

ITEM	CONN. LOAD	D.F.	SUMMER	WINTER
HM	92.98		86.45	77.75
NP	54.98		51.8	51.8
MISC.	50.22	1.0	50.22	50.22
	198.18		188.47	179.77

PANEL NO. SM (NON-ESSENTIAL)
TYPE: LIGHTING & APPLIANCE 480/277V 3Ø 4W WITH GROUND BUS
LOCATION: SOUTH MECH. ROOM - MEZZ.
MAIN: LUGS ONLY 100A
PANEL MOUNTING: SURFACE TOP FEED

CKT. NO.	CIRCUIT BREAKER POLES	FRAME	TRIP	AIC	CONNECTED LOAD (KVA) AØ	BØ	CØ	H.P.	DESCRIPTION
1	3	100A	50A	14,000	5.92	5.92	5.92		CONDENSING UNIT #1 (21.4 FLA)
2			20A		3.33	3.33	3.33		UNIT HEATER #3 10 KW
3					3.33	3.33	3.33		UNIT HEATER #4 10KW
4					2.47	2.47	2.47		ELECTRICAL DUCT HEATER 7.4KW
5			15A		0.27	0.27	0.27	1/2	FAN #8
6	2		20A		0.15	0.15			SUBFEED LOAD CENTER "SML"
7	1						3.0		UNIT HEATER #11 3KW
8	3				1.67	1.67	1.67		UNIT HEATER #12 5KW
9	3								SPARE
10			--	--					BUSSED SPACE
11			--	--					BUSSED SPACE
12-13			--	--					BUSSED SPACE
					17.14	17.14	19.99		

CONNECTED LOAD: AØ 17.14 KVA 61.87A
BØ 17.14 KVA 61.87A
CØ 19.99 KVA 72.17A
TOTAL: 54.27 KVA

ESTIMATED DMAND LOAD

ITEM	CONNECTED LOAD	D.F.	SUMMER	WINTER
COND.	17.76	1.0	17.76	
HTG.	35.4	0.5		17.7
MISC.	1.11	1.0	1.11	1.11
	54.27		18.87	18.81

PANEL NO. MDP (NON-ESSENTIAL)
TYPE: DISTRIBUTION 480/277V 3Ø4W WITH GROUND BUS
LOCATION: T.P.S.S. LOWER LEVEL
MAIN: CIRCUIT BREAKER 1200A FRAME 1200A TRIP
PANEL MOUNTING: SURFACE TOP FEED

CKT. NO.	CIRCUIT BREAKER POLES	FRAME	TRIP	AIC	CONNECTED LOAD (KVA) AØ	BØ	CØ	H.P.	DESCRIPTION
1	3	800A	600A	30,000	107.0	107.0	107.0		CHILLER 321 KVA
2		400A	350A		55.98	55.98	55.98		MOTOR CONTROL CENTER MCC-CH.
3		-	-	-					BUSSED SPACE
4		-	-	-					BUSSED SPACE
5									
6									
7									
8									
9									
10									
11									
12									
					162.98	162.98	162.98		

CONNECTED LOAD: AØ 162.98 KVA 588.5A
BØ 162.98 KVA 588.5A
CØ 162.98 KVA 588.5A
488.94 KVA

ESTIMATED DEMAND LOAD

ITEM	CONNECTED LOAD	D.F.	SUMMER	WINTER
CHILLER	321	0.5	160.5	
MCC-CH	167.94		157.96	56.69
	488.94		318.45	56.69

PANEL NO. SPON (NON-ESSENTIAL)
TYPE: DISTRIBUTION 480/277V 3Ø 4W WITH GROUND BUS
LOCATION: SOUTH AC SWBD. RM
MAIN: LUGS ONLY 225A
PANEL MOUNTING: SURFACE TOP FEED

CKT. NO.	CIRCUIT BREAKER POLES	FRAME	TRIP	AIC	CONNECTED LOAD (KVA) AØ	BØ	CØ	H.P.	DESCRIPTION
1	3	100A	30A	14,000	4.32	4.32	4.32	-	SOUTH TUNNEL O.B. - NON.ESS. FEEDER (FBSP-O.B
2			30A		4.32	4.32	4.32	-	SOUTH TUNNEL I.B. - NON. ESS. FEEDER (FBSP-I.B.)
3			50A		5.57	5.57	5.57	15	EJECTOR COMPRESSOR
4			50A		5.57	5.57	5.57	15	EJECTOR COMPRESSOR
5			30A		3.66	4.12	3.6	-	SUBFEED TO PANEL 'SPP'
6			20A						DUPLEX SUMP PUMPS IN SEWAGE EJECTOR 1
7			—	—					BUSSED SPACE
8			—	—					BUSSED SPACE
9									
10									
11									
12									
					23.44	23.91	23.28		

CONNECTED LOAD: AØ 23.44 KVA 84.62A
BØ 23.9 KVA 86.28A
CØ 23.38 KVA 84.4A
TOTAL 70.72KVA

ESTIMATED DEMAND LOAD

ITEM	CONN. LOAD	D.F.	SUMMER	WINTER
SPP	11.38		8.78	10.08
MISC.	59.34	1.0	59.34	59.34
	70.72		68.12	69.42

PANEL NO. NM (NON-ESSENTIAL)
TYPE: LIGHTING & APPLIANCE 480/277V 3Ø 4W WITH GROUND BUS
LOCATION: NORTH MECH. ROOM - MEZZ.
MAIN: LUGS ONLY 100A
PANEL MOUNTING: SURFACE TOP FEED

CKT. NO.	CIRCUIT BREAKER POLES	FRAME	TRIP	AIC	CONNECTED LOAD (KVA) AØ	BØ	CØ	H.P.	DESCRIPTION
1	3	100A	20A	14,000	2.5	2.5	2.5		UNIT HEATER #1 7.5KW
2					2.5	2.5	2.5		UNIT HEATER #2 7.5KW
3			15A		0.69	0.69	0.69	1/4	FAN #5
4			15A		0.27	0.27	0.27	1/4	FAN #7
5	2		20A		0.57	0.57			SUBFEED LOAD CENTER "NML"
6	1		20A						SPARE
7	3		—	—					BUSSED SPACE
8			—	—					BUSSED SPACE
9			—	—					BUSSED SPACE
10									
11									
12									
					6.53	6.53	5.69		

CONNECTED LOAD: AØ 6.53 KVA 23.57A
BØ 6.53 KVA 23.57A
CØ 5.96 KVA 21.5A
TOTAL: 19.02 KVA

ESTIMATED DEMAND LOAD

ITEM	CONNECTED LOAD	D.F.	SUMMER	WINTER
HTG.	13.0	0.5		7.5
MISC.	4.02	1.0	4.02	4.02
	19.02		4.02	11.52

PANEL NO. MP (NON-ESSENTIAL)
TYPE: LIGHTING & APPLIANCE 480/277V 3Ø 4W WITH GROUND BUS
LOCATION: MECHANICAL ROOM - PASSAGEWAY
MAIN: LUGS ONLY 225A
PANEL MOUNTING: SURFACE TOP FEED

CKT. NO.	CIRCUIT BREAKER POLES	FRAME	TRIP	AIC	CONNECTED LOAD (KVA) AØ	BØ	CØ	H.P.	DESCRIPTION
1	3	100A	40A	14,000	5.8	5.8	5.8	15	AIR CONDITIONING UNIT #3(WITH 1/4 HP FILTER)
2			20A		2.5	2.5	2.5		UNIT HEATER #5 7.5 KW
3			15A		0.27	0.27	0.27	1/2	FAN #12
4			15A		0.37	0.37	0.37	1	FAN #13
5			15A		0.37	0.37	0.37	1	FAN #14
6			20A		3.33	3.33	3.33		UNIT HEATER #9 10 KW
7					3.33	3.33	3.33		UNIT HEATER #10 10KW
8	1				3.0				WALL CONVECTOR #5
9	1					4.0			WALL CONVECTOR #3
10	1		20A						SPARE
11	3		30A		2.01	2.01	2.01		SUBFEED LOAD CENTER "MPL"
12	3		20A						SPARE
13	3								
14	3		15A						
					20.98	21.98	17.46		

CONNECTED LOAD: AØ 20.98 KVA 75.74
BØ 21.98 KVA 79.35A
CØ 17.98 KVA 64.9A
TOTAL: 60.94 KVA

ESTIMATED DEMAND LOAD

ITEM	CONNECTED LOAD	D.F.	SUMMER	WINTER
HEAT	34.5	0.5		17.25
MPL	6.04		0.25	2.42
A.C.	17.4	1.0	17.4	
MISC.	3.0	1.0	3.0	3.0
	60.94		20.65	22.67

DESIGNED	B. STAUFFER	2-15-80 DATE
DRAWN	D. JACKSON	3-10-80 DATE
CHECKED	H.B. ZACKRISON	6-16-80 DATE
APPROVED	H.B. ZACKRISON	6-16-80 DATE

REFERENCE DRAWINGS

NUMBER	DESCRIPTION

REVISIONS

DATE	BY	DESCRIPTION
9-25-80	H.Z.	REVISED PNLS. "CP", "MP" & "SM"
7-11-83	HTN	1 DUPLEX SUMP PUMPS PER PCO-18, AS BUILT

3000-R
STATE OF MARYLAND

WASHINGTON METROPOLITAN AREA TRANSIT AUTHORITY

MATHEWS • CHATELAIN • BEALL
ENGINEERS AND ARCHITECTS
SECTION DESIGNER

SUBMITTED [signature] DATE 8-15-80

DE LEUW, CATHER & COMPANY
GENERAL ENGINEERING CONSULTANT

HARRY WEESE & ASSOCIATES
GENERAL ARCHITECTURAL CONSULTANT

APPROVED [signature]

ROCKVILLE ROUTE
BETHESDA STATION
PANELBOARD SCHEDULES

SCALE: NONE
DRAWING NO. FAII-E-41
M334-190

PANEL NO. NP (ESSENTIAL)
TYPE: LIGHTING 480/277V 3ø 4W WITH GROUND BUS

LOCATION: NORTH AC SWITCHBOARD ROOM
MAIN: LUGS ONLY: 225A
PANEL MOUNTING: SURFACE TOP FEED

DESCRIPTION	CONNECTED LOAD (KVA) AØ	BØ	CØ	CIRCUIT BREAKER FRAME	TRIP	A.I.C.	CKT. NO.	CKT. NO.	CIRCUIT BREAKER FRAME	TRIP	A.I.C.	CONNECTED LOAD (KVA) AØ	BØ	CØ	DESCRIPTION
NORTH PLATFORM PYLON LIGHTS	2.5			150A	20A	25,000	1	2	150A	20A	25,000	2.15			NORTH ANCIL.RM. PLATF.-LIGHTS
		1.13					3	4					2.7		NORTH ANCIL.RM. MEZZ.-LIGHTS
			1.13				5	6		30A				2.5	SUB FEED TO PANEL "OLH"
SUBFEED TO PANEL "NPPL"	2.2				30A		7	8				2.5			
		1.9					9	10					2.5		
			1.96				11	12		20A					SPARE
PLATFORM ELEVATOR FEEDER	10.6				70A		13	14							
		10.6					15	16							
			10.6				17	18							
BUSSED SPACE					—	—	19	20		60A	—				ENTR. ESCALATOR 1
					—	—	21	22		60A	—				MOTOR FEEDER 1
					—	—	23	24		60A	—				
	15.3	13.63	13.69									4.65	5.2	2.5	

CONNECTED LOAD: AØ 19.95 KVA 72.02A
BØ 18.83 KVA 67.98A
CØ 16.19 KVA 58.45A
TOTAL: 54.98 KVA

SN GND

ESTIMATED DEMAND LOAD:

ITEM	CONN. LOAD	D.F.	SUMMER	WINTER
ELEV.	31.8	0.9	28.62	28.62
MISC.	23.18	1.0	23.18	23.18
	54.98		51.8	51.8

PANEL NO. SPPL (ESSENTIAL)
TYPE: LIGHTING 208/120V 3ø 4W WITH GROUND BUS

LOCATION: SOUTH AC SWBD RM.
MAIN CIRCUIT BREAKER 100A FRAME 40A TRIP
PANEL MOUNTING: SURFACE TOP FEED

DESCRIPTION	CONNECTED LOAD (KVA) AØ	BØ	CØ	CIRCUIT BREAKER FRAME	TRIP	A.I.C.	CKT. NO.	CKT. NO.	CIRCUIT BREAKER FRAME	TRIP	A.I.C.	CONNECTED LOAD (KVA) AØ	BØ	CØ	DESCRIPTION
PLATFORM EDGE LIGHTS - O.B.	1.2			100A	20A	14,000	1	2	100A	15A	14,000	0.6			SOUTH R.A. PLENUM - LIGHTS
		1.2					3	4		20A			0.8		SOUTH DOME SPACE - LIGHTS
			1.2				5	6		15A				0.26	FAN #11 1/20 HP
SPARE							7	8		15A		0.26			FAN #10 1/20HP
							9	10		20A					SPARE
							11	12							
BUSSED SPACE					—	—	13	14		—	—				BUSSED SPACE
					—	—	15	16		—	—				
					—	—	17	18		—	—				
							19	20							
							21	22							
							23	24							
	1.2	1.2	1.2									0.86	0.8	0.26	

CONNECTED LOAD: AØ 2.06 KVA 17.17A
BØ 2.0 KVA 16.7 A
CØ 1.46 KVA 12.2 A
TOTAL: 5.52 KVA

SN GND

ESTIMATED DEMAND LOAD: 5.52 KVA
SUMMER OR WINTER

PANEL NO. SP (ESSENTIAL)
TYPE: LIGHTING 480/277V 3ø 4W WITH GROUND BUS

LOCATION: SOUTH AC SWITCHBOARD ROOM
MAIN: LUGS ONLY 100A
PANEL MOUNTING: SURFACE TOP FEED

DESCRIPTION	CONNECTED LOAD (KVA) AØ	BØ	CØ	CIRCUIT BREAKER FRAME	TRIP	A.I.C.	CKT. NO.	CKT. NO.	CIRCUIT BREAKER FRAME	TRIP	A.I.C.	CONNECTED LOAD (KVA) AØ	BØ	CØ	DESCRIPTION
SOUTH PLATFORM PYLON LIGHTS	2.5			100A	20A	14,000	1	2	100A	20A	14,000				SPARE
		2.5					3	4					2.12		NORTH ANCIL. RM. PLATF.LIGHTS
			1.13				5	6						2.4	NORTH ANCIL. RM.
SUBFEED TO PANEL "SPPL"	2.06						7	8				1.66			
		2.0					9	10					4.0		WALL CONVECTOR #2
			1.46				11	12							SPARE
SPARE					20A		13	14		—	—				BUSSED SPACE
BUSSED SPACE					—	—	15	16		—	—				
BUSSED SPACE					—	—	17	18		—	—				
							19	20							
							21	22							
							23	24							
	4.56	4.5	2.59									1.66	6.12	2.4	

CONNECTED LOAD: AØ 6.22 KVA 22.5A
BØ 10.62 KVA 38.34A
CØ 4.99 KVA 19.0A
TOTAL: 21.83 KVA

SN GND

ESTIMATED DEMAND LOAD 21.83 KVA
SUMMER OR WINTER

PANEL NO. NT (ESSENTIAL)
TYPE: LIGHTING 480/277V 3ø 4W WITH GROUND BUS

LOCATION: NORTH AC SWITCHBOARD RM.
MAIN: LUGS ONLY 100A
PANEL MOUNTING: SURFACE TOP FEED

DESCRIPTION	CONNECTED LOAD (KVA) AØ	BØ	CØ	CIRCUIT BREAKER FRAME	TRIP	A.I.C.	CKT. NO.	CKT. NO.	CIRCUIT BREAKER FRAME	TRIP	A.I.C.	CONNECTED LOAD (KVA) AØ	BØ	CØ	DESCRIPTION
N.PLATF SAFETY WALK LTG.-I.B.	2.25			100A	20A	14,000	1	2	100A	20A	14,000	2.25			N. PLATF SAFETY WALK LTG.-O.B.
		2.25					3	4					2.25		
			2.25				5	6						2.25	
N. TUNNEL LTG-I.B.(FBNL-I.B.)	3.0						7	8				3.0			N. TUNNEL LTG-O.B. (FBNL-O.B.)
		3.0					9	10					3.0		
			3.0				11	12						3.0	
N. PLATF. SAFETY WALK LTG.IB.	2.7						13	14				2.7			N. PLATF. SAFETY WALK LTG. O.B.
		2.7					15	16					2.7		
			2.25				17	18						2.25	
2 SPACE	0.8						19	20							SPARE
SPARE							21	22							
							23	24							
	8.75	7.95	7.5									7.95	7.95	7.5	

CONNECTED LOAD: AØ 16.7 KVA 60.29A
BØ 15.9 KVA 57.4 A
CØ 15.0 KVA 54.15A
TOTAL: 47.6 KVA

SN GND

ESTIMATED DEMAND LOAD: 47.6 KVA
SUMMER OR WINTER

PANEL NO. NPPL (ESSENTIAL)
TYPE: LIGHTING 208/120V 3ø 4W WITH GROUND BUS

LOCATION: NORTH AC SWBD RM.
MAIN: CIRCUIT BREAKER 100A FRAME 50A TRIP
PANEL MOUNTING: SURFACE TOP FEED

DESCRIPTION	CONNECTED LOAD (KVA) AØ	BØ	CØ	CIRCUIT BREAKER FRAME	TRIP	A.I.C.	CKT. NO.	CKT. NO.	CIRCUIT BREAKER FRAME	TRIP	A.I.C.	CONNECTED LOAD (KVA) AØ	BØ	CØ	DESCRIPTION
PLATFORM EDGE LIGHTS - O.B.	1.2			100A	20A	14,000	1	2	100A	20A	14,000	0.6			NORTH R.A. PLENUM - LIGHTS
		1.2					3	4					0.7		NORTH DOME SPACE - LIGHTS
			1.2				5	6		15A				0.26	FAN #9 1/20 HP
PLATF. ELEV. LIGHTS & RECEPT.	0.4						7	8		20A		0.4			PLATF. ELEV. LTG. & RECEPT.
2 ESS. LIGHT NORTH VENT SHAFT							9	10					0.4		
PEPCO DEMAND METER			0.5				11	12						0.4	
BUSSED SPACE					—	—	13	14		—	—				BUSSED SPACE
					—	—	15	16		—	—				
					—	—	17	18		—	—				
							19	20							
							21	22							
							23	24							
	1.6	1.2	1.7									0.6	0.7	0.26	

CONNECTED LOAD: AØ 2.2 KVA 18.3A
BØ 1.9 KVA 15.8A
CØ 1.96 KVA 16.3A
TOTAL: 6.06

SN GND

ESTIMATED DEMAND LOAD 6.06 KVA
SUMMER OR WINTER

PANEL NO. ST (ESSENTIAL)
TYPE: LIGHTING 480/277V 3ø 4W WITH GROUND BUS

LOCATION: SOUTH AC SWBD RM.
MAIN: LUGS ONLY 100A
PANEL MOUNTING: SURFACE TOP FEED

DESCRIPTION	CONNECTED LOAD (KVA) AØ	BØ	CØ	CIRCUIT BREAKER FRAME	TRIP	A.I.C.	CKT. NO.	CKT. NO.	CIRCUIT BREAKER FRAME	TRIP	A.I.C.	CONNECTED LOAD (KVA) AØ	BØ	CØ	DESCRIPTION
S. PLATF SAFETY WALK LTG.I.B.	2.25			100A	20A	14,000	1	2	100A	20A	14,000	2.25			S. PLATF SAFETY WALK LTG.-O.B.
		2.25					3	4					2.25		
			2.25				5	6						2.25	
S. TUNNEL LTG.-I.B.(FBSL-I.B)	0.7						7	8				0.7			S. TUNNEL LTG.-O.B. (FBSL-OB)
		0.7					9	10					0.7		
			0.7				11	12						0.7	
S. PLATF. SAFETY WALK LTG.-I.B.	2.7						13	14				2.7			S. PLATF. SAFETY WALK LTG.-O.B.
		2.25					15	16					2.25		
			2.25				17	18						2.25	
SPARE							19	20				0.8			ELM ST. VENT SHAFT LTG.
							21	22							SPARE
							23	24						1.31	PIPE HEAT TRACING
	5.65	5.2	5.2									6.45	5.2	5.88	

CONNECTED LOAD: AØ 12.1 KVA 43.68A
BØ 10.4 KVA 37.55A
CØ 11.08 KVA 40 A
TOTAL: 33.58 KVA

SN GND

ESTIMATED DEMAND LOAD: 33.58 KVA
SUMMER OR WINTER

AS BUILT CONDITION
performed by
RESIDENT ENGINEER DATE

DESIGNED B. STAUFFER	1-18-79	DATE
DRAWN J. LEDFORD	2-10-79	DATE
CHECKED H.B. ZACKRISON	6-16-80	DATE
APPROVED H.B. ZACKRISON	6-16-80	DATE

REFERENCE DRAWINGS

NUMBER	DESCRIPTION

REVISIONS

DATE	BY	DESCRIPTION
9-25-80	H.Z.	REVISED PNL. SCHEMATIC DIAGRAMS
	H.Z.	REVISED PNL. "NP"
7-12-83	HTN	1 MOD. CONDUIT + CIRCUITS BETH STA. PER PCO-7, AS BUILT
-	-	2 REV. PER FIELD CONDITION, AS-BUILT

3889-R
STATE OF MARYLAND

WASHINGTON METROPOLITAN AREA TRANSIT AUTHORITY

MATHEWS • CHATELAIN • BEALL
ENGINEERS AND ARCHITECTS
SECTION DESIGNER
SUBMITTED Jerrily R. Press DATE 8-15-80

DE LEUW, CATHER & COMPANY
GENERAL ENGINEERING CONSULTANT

HARRY WEESE & ASSOCIATES
GENERAL ARCHITECTURAL CONSULTANT
APPROVED

ROCKVILLE ROUTE
BETHESDA STATION
PANELBOARD SCHEDULES

SCALE NONE
DRAWING NO. FAII-E-42
M334-191

PANEL NO. NPP (NON-ESSENTIAL)
TYPE: LIGHTING 208/120V 3ø 4W WITH GROUND BUS

LOCATION: NORTH AC SWITCHBOARD ROOM
MAIN: CIRCUIT BREAKER: 100A FRAME 50A TRIP
PANEL MOUNTING: SURFACE TOP FEED

DESCRIPTION	CONNECTED LOAD (KVA) AØ	BØ	CØ	CIRCUIT BREAKER FRAME	TRIP	A.I.C.	CKT. NO.	CKT. NO.	CIRCUIT BREAKER FRAME	TRIP	A.I.C.	CONNECTED LOAD (KVA) AØ	BØ	CØ	DESCRIPTION
NORTH DOME SPACE-RECEPT.	1.08			100A	20A	14,000	1	2	100A	20A	14,000	0.72			RECEPT.-NORTH PLATF. & MEZZ.
N. ANCIL. RM. - PLATF. RECEPT.		0.72					3	4					1.08		NORTH R.A. PLENUM - RECPT.
N. ANCIL. RM. MEZZ. RECEPT.			1.08				5	6						0.2	PLATF. ESCAL. AUX SUPPLY
	1.08						7	8				0.2			
SUMP PUMP - R.A. PLENUM		0.7			15A		9	10					0.2		
			0.7				11	12						0.4	HEATER FOR 13KV SWGR.
	0.7						13	14				0.6			HEATER FOR 480V SWBD.
SPARE					20A		15	16							SPARE
SPARE					20A		17	18							SPARE
BUSSED SPACE					—	—	19	20		—	—				BUSSED SPACE
					—	—	21	22		—	—				
					—	—	23	24		—	—				
	2.86	1.42	1.78									1.52	1.28	0.6	

CONNECTED LOAD: Aø 4.38 KVA 36.5A
Bø 2.7 KVA 22.5A
Cø 2.38 KVA 19.8A
TOTAL: 9.46 KVA

SN GND

ESTIMATED DEMAND LOAD

ITEM	CONN. LOAD	D.F.	SUMMER	WINTER
HTG.	1.0	0.5	0	0.5
MISC.	8.46	1.0	8.46	8.46
			8.46	8.96

PANEL NO. EEL (ESSENTIAL) (N.I.C. - FOR REFERENCE ONLY)
TYPE: 208/120V 3ø 4W WITH GROUND BUS ESTIMATED LOAD
RECEPT. & MISC. POWER

LOCATION: ESCALATORWAY MACHINE ROOM
MAIN CIRCUIT BREAKER: 100A FRAME 50A TRIP
PANEL MOUNTING: SURFACE

DESCRIPTION	CONNECTED LOAD (KVA) AØ	BØ	CØ	CIRCUIT BREAKER FRAME	TRIP	A.I.C.	CKT. NO.	CKT. NO.	CIRCUIT BREAKER FRAME	TRIP	A.I.C.	CONNECTED LOAD (KVA) AØ	BØ	CØ	DESCRIPTION
ESTIMATED LOAD:							1	2							
RECEPTACLE 5.4 KVA.							3	4							
8 - 1ø CIRCUITS							5	6							
SPARE 10 CKTS							7	8							
BUSSED SPACE 6 CKTS							9	10							
							11	12							
TOTAL LOAD 5.4 KVA							13	14							
TOTAL 24 POLES							15	16							
							17	18							
							19	20							
							21	22							
							23	24							

ESTIMATED CONNECTED LOAD: 5.4 KVA
SUMMER OR WINTER

SN GND

NOT USED

PANEL NO. SPP (NON-ESSENTIAL)
TYPE: LIGHTING 208/120V 3ø 4W WITH GROUND BUS

LOCATION: SOUTH AC SWITCHBOARD ROOM
MAIN: CIRCUIT BREAKER 100A FRAME 50A TRIP
PANEL MOUNTING: SURFACE TOP FEED

DESCRIPTION	CONNECTED LOAD (KVA) AØ	BØ	CØ	CIRCUIT BREAKER FRAME	TRIP	A.I.C.	CKT. NO.	CKT. NO.	CIRCUIT BREAKER FRAME	TRIP	A.I.C.	CONNECTED LOAD (KVA) AØ	BØ	CØ	DESCRIPTION
SOUTH DOME SPACE - RECEPT.	1.44			100A	20A	14,000	1	2	100A	20A	14,000	0.72			SOUTH PLATF. - RECEPT.
S. ANCIL. RM. PLATF. RECEPT.		1.44					3	4					1.08		SOUTH RA PLENUM - RECEPT.
S. ANCIL. RM. MEZZ. RECEPT.			0.9				5	6						0.4	HEATER FOR 13 KV SWGR.
	0.9						7	8				0.6			HEATER FOR 480V SWGR.
		0.9					9	10		15A			0.7		SUMP PUMP - R.A. PLENUM
ELECTRIC WATER HEATER			1.6				11	12		15A				0.7	SUMP PUMP EJECTOR ROOM
SPARE							13	14		20A					SPARE
BUSSED SPACE					—	—	15	16		—	—				BUSSED SPACE
BUSSED SPACE					—	—	17	18		—	—				BUSSED SPACE
							19	20							
							21	22							
							23	24							
	2.34	2.34	2.5									1.32	1.78	1.1	

CONNECTED LOAD: Aø 3.66 KVA 30.5A
Bø 4.12 KVA 34.3A
Cø 3.6 KVA 30.0A
TOTAL: 11.38 KVA

SN GND

ESTIMATED DEMAND LOAD

ITEM	CONN. LOAD	D.F.	SUMMER	WINTER
HTG.	2.6	0.5	0	1.3
MISC.	8.78	1.0	8.78	8.78
			8.78	10.08

PANEL NO. ML (NON-ESSENTIAL)
TYPE: LIGHTING 208/120V 3ø 4W WITH GROUND BUS

LOCATION: ATTIC MECHANICAL RM - PASSAGE
MAIN: LUGS ONLY 100A
PANEL MOUNTING: SURFACE TOP FEED

DESCRIPTION	CONNECTED LOAD (KVA) AØ	BØ	CØ	CIRCUIT BREAKER FRAME	TRIP	A.I.C.	CKT. NO.	CKT. NO.	CIRCUIT BREAKER FRAME	TRIP	A.I.C.	CONNECTED LOAD (KVA) AØ	BØ	CØ	DESCRIPTION
ACU #3 FILTER 1/4HP	0.7			100A	20A	14,000	1	2	100A	20A	14,000	0.72			RECEPTACLES
R.S. & C.		3.6			30A		3	4					0.72		
SPARE					20A		5	6						0.9	
SPARE					20A		7	8							SPARE
BUSSED SPACE					—	—	9	10							BUSSED SPACE
BUSSED SPACE					—	—	11	12							BUSSED SPACE
							13	14							
							15	16							
							17	18							
							19	20							
							21	22							
							23	24							
	0.7	3.6										0.72	0.72	0.9	

CONNECTED LOAD: Aø 1.42 KVA 11.8A
Bø 4.32 KVA 36.0A
Cø 0.9 KVA 7.5A
TOTAL: 6.64 KVA

NOT USED

SN GND

ESTIMATED DEMAND LOAD: 6.64 KVA
SUMMER OR WINTER

AS BUILT COND.

PANEL NO. EEH (ESSENTIAL) (N.I.C.-FOR REFERENCE ONLY)
TYPE: LIGHTING 480V/277V 3ø 4W WITH GROUND BUS

LOCATION: ESCALATORWAY MACHINE ROOM
MAIN: LUGS ONLY 100A
PANEL MOUNTING: SURFACE

DESCRIPTION	CONNECTED LOAD (KVA) AØ	BØ	CØ	CIRCUIT BREAKER FRAME	TRIP	A.I.C.	CKT. NO.	CKT. NO.	CIRCUIT BREAKER FRAME	TRIP	A.I.C.	CONNECTED LOAD (KVA) AØ	BØ	CØ	DESCRIPTION
ESTIMATED LOAD:							1	2							
PNL. "EEL" SUBFEED 5.4 KVA							3	4							
1-3ø CIRCUIT							5	6							
LIGHTING 10 KVA							7	8							
6-1ø CIRCUITS							9	10							
SPARE 1 CKT.							11	12							
BUSSED SPACE 2 CKTS.							13	14							
							15	16							
TOTAL LOAD 15.4 KVA							17	18							
TOTAL 12 POLES							19	20							
							21	22							
							23	24							

ESTIMATED CONNECTED LOAD: 15.4 KVA
SUMMER OR WINTER

SN GND

NOT USED

PANEL NO. "HM" (ESSENTIAL)
TYPE: LIGHTING 480/277V-3ø 4W WITH GROUND BUS

LOCATION: CLEANERS' ROOM-PASSAGEWAY
MAIN: LUGS ONLY: 225A
PANEL MOUNTING: SURFACE BOTTOM FEED

DESCRIPTION	CONNECTED LOAD (KVA) AØ	BØ	CØ	CIRCUIT BREAKER FRAME	TRIP	A.I.C.	CKT. NO.	CKT. NO.	CIRCUIT BREAKER FRAME	TRIP	A.I.C.	CONNECTED LOAD (KVA) AØ	BØ	CØ	DESCRIPTION
ENT. ELEV. MOTOR FDR. (15HP)	5.57			100A	50A	14,000	1	2	100A	40A	14,000	1.66			SUBFEED LOAD CENTER "H"
		5.57					3	4					1.66		
			5.57				5	6						1.8	
SUBFEED PANEL "F"	20.1			225A	125A		7	8		20A		1.8			PASSAGEWAY LIGHTING
		19.1					9	10					1.8		
			19.1				11	12						1.8	
MEZZ.-PYLONS & DOWN LIGHTS	1.42			100A	20A		13	14				3.09			ANCILLARY SPACE LIGHTING
		1.54					15	16							SPARE
			1.43				17	18							SPARE
SPARE							19	20							SPARE
BUSSED SPACE					—	—	21	22		—	—				BUSSED SPACE
BUSSED SPACE					—	—	23	24		—	—				BUSSED SPACE
	27.1	26.2	26.1									6.55	3.46	3.6	

ESTIMATED CONNECTED LOAD: Aø 33.65 KVA 121.5A
Bø 29.66 KVA 107.1A
Cø 29.7 KVA 107.2A
TOTAL: 92.98 KVA

SN GND

ITEM	CONN. LOAD	D.F.	SUMMER	WINTER
ELEV.	16.7	0.9	15.03	15.03
"F"	58.3		53.44	44.74
MISC.	17.98	1.0	17.98	17.98
			86.45	77.75

DESIGNED	B. STAUFFER	1-16-79 DATE
DRAWN	J. LEDFORD	1-22-79 DATE
CHECKED	H.B. ZACHRISON	6-16-80 DATE
APPROVED	H.B. ZACHRISON	6-16-80 DATE

REFERENCE DRAWINGS

NUMBER	DESCRIPTION

REVISIONS

DATE	BY	DESCRIPTION
9-25-80	H.Z.	REVISED PANEL "HM" SCHEMATIC

3889-R

WASHINGTON METROPOLITAN AREA TRANSIT AUTHORITY

MATHEWS • CHATELAIN • BEALL
ENGINEERS AND ARCHITECTS
SECTION DESIGNER
SUBMITTED Jerrilyn R. Press DATE 8-15-80

DE LEUW, CATHER & COMPANY
GENERAL ENGINEERING CONSULTANT

HARRY WEESE & ASSOCIATES
GENERAL ARCHITECTURAL CONSULTANT

APPROVED

ROCKVILLE ROUTE
BETHESDA STATION
PANELBOARD SCHEDULES

SCALE: NONE
DRAWING NO. FAII-E-43
M334-192

PANEL NO. F (ESSENTIAL)
TYPE: LIGHTING 208/120V 3Ø 4W WITH GROUND BUS

LOCATION: CLEANERS ROOM - PASSAGEWAY
MAIN: CIRCUIT BREAKER 400A FRAME 250A TRIP - 14,000 A.I.C.
PANEL MOUNTING: SURFACE TOP FEED

DESCRIPTION	CONNECTED LOAD (KVA) AØ	BØ	CØ	CIRCUIT BREAKER FRAME	TRIP	A.I.C.	CKT. NO.
KIOSK A/C UNIT	2.9			100A	30A	14,000	1
		2.9					3
			2.9				5
VENDING MACHINE - FREE AREA	1.8				20A		7
		1.8					9
			1.8				11
	1.8						13
		1.8					15
			1.8				17
VENDING MACHINE - PAID AREA	1.8						19
		1.8					21
FUT.VEND. MACHINE-PAID AREA			1.8				23
	1.8						25
FARE GATE CONSOLE		1.8					27
			1.8				29
SPARE							31
							33
							35
BUSSED SPACE					—	—	37
					—	—	39
					—	—	41
	10.1	10.1	10.1				

CKT. NO.	CIRCUIT BREAKER FRAME	TRIP	A.I.C.	CONNECTED LOAD (KVA) AØ	BØ	CØ	DESCRIPTION
2	100 A	20A	14,000	1.0			KIOSK LIGHTS
4					1.8		VENDING MACHINE - FREE AREA
6						1.8	
8				1.8			
10					1.8		VENDING MACHINE-PAID AREA
12						1.8	
14				1.8			FUT.VEND.MACHINE-PAID AREA
16					1.8		
18						1.8	FARE GATE CONSOLE
20				1.8			
22					1.8		
24						1.8	
26				1.8			BUS TRANSFER VEND. MACHINE
28					1.8		
30						1.8	
32				1.8			
34							SPARE
36							
38		—	—				BUSSED SPACE
40		—	—				
42		—	—				
				10.0	9.0	9.0	

ESTIMATED DEMAND LOAD	CONN. LOAD	D.T.	SUMMER	WINTER
FARE COL.	58.6	0.9	43.74	43.74
A/C	8.7	1.0	8.7	0
LTG.	1.0	1.0	1.0	1.0
			53.44	43.74

CONNECTED LOAD: AØ 20.1 KVA 167.5A
BØ 19.1 KVA 159.16A
CØ 19.1 KVA 159.16A
TOTAL: 58.3 KVA

SN GND

PANEL NO. CPL (NON-ESSENTIAL)
TYPE: LIGHTING 208/120V 3Ø-4W W/GROUND BUS

LOCATION: CHILLER PLANT
MAIN: CIRCUIT BREAKER 100A FRAME 100A TRIP 10,000 A.I.C
PANEL MOUNTING: SURFACE TOP FEED

DESCRIPTION	CONNECTED LOAD (KVA) AØ	BØ	CØ	CIRCUIT BREAKER FRAME	TRIP	A.I.C.	CKT. NO.
CONDENSER WATER TREATMENT	1.5			100A	20A	10,000	1
CHILLER OIL HEATER		1.5					3
SPARE					15A		5
CHILLER OIL PUMP	0.7						7
SPARE							9
RECEPTACLES			1.08		20A		11
	0.9						13
		0.9					15
			0.18				17
	0.8						19
A.C. SWITCH GEAR HEATER		1.5					21
			1.5				23
	1.5						25
BUSSED SPACE					—	—	27
BUSSED SPACE					—	—	29
					—	—	31
					—	—	33
					—	—	35
							37
							39
							41
	5.4	3.9	2.76				

CKT. NO.	CIRCUIT BREAKER FRAME	TRIP	A.I.C.	CONNECTED LOAD (KVA) AØ	BØ	CØ	DESCRIPTION
2	100A	20A	10,000	0.2			LIGHTS INSIDE VU #5 #6
4		15A					SPARE
6						0.7	CHILLER PURGE PUMP
8		20A					4" COLD WATER PIPE HEAT TRACING EAST STRUCT. 1
10		20A					4" COLD WATER NORTH CHAMBER 2
12						1.8	FUTURE A.T.S. (N.I.C.)
14				0.9			RECEPTACLES
16					0.72		
18						0.18	
20				0.18			
22						0.7	AIR DRYER 1/4 HP
24							
26							
28		—	—				BUSSED SPACE
30		—	—				BUSSED SPACE
32		—	—				
34		—	—				
36		—	—				
38							
40							
42							
				1.98	2.22	4.88	

CONNECTED LOAD: AØ 7.38 KVA 61.5A
BØ 6.12 KVA 51.0A
CØ 7.64 KVA 63.7A
TOTAL: 21.14 KVA

SN GND

ESTIMATED DEMAND LOAD: 21.14 KVA
SUMMER OR WINTER

PANEL NO. "OLH" (ESSENTIAL)
TYPE: LIGHTING 480/277V 3Ø4W WITH GROUND BUS

LOCATION: NORTH VENT SHAFT UPPER STRUCTURE
MAIN: LUGS ONLY 100A
PANEL MOUNTING: SURFACE TOP FEED

SEE NOTE

DESCRIPTION	CONNECTED LOAD (KVA) AØ	BØ	CØ	CIRCUIT BREAKER FRAME	TRIP	A.I.C.	CKT. NO.
SUBFEED LOAD CENTER "OL"				100A	40A	14,000	1
							3
							5
EXTERIOR PYLON	1.13				20A		7
BUSSED SPACE					—	—	9
BUSSED SPACE					—	—	11
							13
							15
							17
							19
							21
							23
	1.13						

CKT. NO.	CIRCUIT BREAKER FRAME	TRIP	A.I.C.	CONNECTED LOAD (KVA) AØ	BØ	CØ	DESCRIPTION
2	100A	20A	14,000				SPARE
4							
6							
8							
10		—	—				BUSSED SPACE
12		—	—				
14							
16							
18							
20							
22							
24							

CONNECTED LOAD: 1.13 KVA 4.08A

SN GND

ESTIMATED FUTURE DEMAND LOAD: 7.5 KVA
SUMMER OR WINTER

NOTE: 30A 3P N.O. CONTACTOR INSTALLED WITHIN PANEL CABINET. SEE "SITE LIGHTING CONTROL DIAGRAM" DWG. E-26.

PANEL NO.
TYPE:

LOCATION:
MAIN:
PANEL MOUNTING:

DESCRIPTION	CONNECTED LOAD (KVA) AØ	BØ	CØ	CIRCUIT BREAKER FRAME	TRIP	A.I.C.	CKT. NO.
							1
							3
							5
							7
							9
							11
							13
							15
							17
							19
							21
							23

CKT. NO.	CIRCUIT BREAKER FRAME	TRIP	A.I.C.	CONNECTED LOAD (KVA) AØ	BØ	CØ	DESCRIPTION
2							
4							
6							
8							
10							
12							
14							
16							
18							
20							
22							
24							

SN GND

PANEL NO.
TYPE:

LOCATION:
MAIN:
PANEL MOUNTING:

DESCRIPTION	CONNECTED LOAD (KVA) AØ	BØ	CØ	CIRCUIT BREAKER FRAME	TRIP	A.I.C.	CKT. NO.
							1
							3
							5
							7
							9
							11
							13
							15
							17
							19
							21
							23

CKT NO.	CIRCUIT BREAKER FRAME	TRIP	A.I.C.	CONNECTED LOAD (KVA) AØ	BØ	CØ	DESCRIPTION
2							
4							
6							
8							
10							
12							
14							
16							
18							
20							
22							
24							

SN GND

AS BUILT CONDITION
SEP 19 1980
DATE

DESIGNED	B.STAUFFER	8-8-79 DATE
DRAWN	B.JOHNSON	4-2-79 DATE
CHECKED	H.B.ZACKRISON	8-18-80 DATE
APPROVED	H.B.ZACKRISON	8-18-80 DATE

REFERENCE DRAWINGS

NUMBER	DESCRIPTION

REVISIONS

DATE	BY		DESCRIPTION
9-25-80	H.Z.		REVISED PANELS 'CPL' & 'OLH'
7-11-80	HTN	1	HEAT TRACING REV. PERPCO-7, AS-BUILT
-	-	2	REVISED PER FIELD COND., AS-BUILT

BOARD OF ENGINEERS AND REGISTRATION OF ARCHITECTS 3889-R STATE OF MARYLAND

WASHINGTON METROPOLITAN AREA TRANSIT AUTHORITY

MATHEWS • CHATELAIN • BEALL
ENGINEERS AND ARCHITECTS
SECTION DESIGNER
SUBMITTED Gerald G. Spear DATE 8-15-80

DE LEUW, CATHER & COMPANY
GENERAL ENGINEERING CONSULTANT

HARRY WEESE & ASSOCIATES
GENERAL ARCHITECTURAL CONSULTANT
APPROVED

ROCKVILLE ROUTE
BETHESDA STATION
PANELBOARD SCHEDULES

SCALE: NONE
DRAWING NO. FAII-E-44
M334-193

PANEL NO. NEH (EMERGENCY)
TYPE: LIGHTING 480/277V 3ø 4W WITH GROUND BUS

LOCATION: NORTH AC SWITCHBOARD ROOM
MAIN: LUGS-ONLY 100A
PANEL MOUNTING: SURFACE TOP FEED

DESCRIPTION	CONNECTED LOAD (KVA) AØ	BØ	CØ	RATING SWITCH	FUSE	A.I.C.	CKT. NO.	CKT. NO.	RATING SWITCH	FUSE	A.I.C.	CONNECTED LOAD (KVA) AØ	BØ	CØ	DESCRIPTION
N. PLATF SAFETY WALK LTG.-I.B.	1.56			30A	20A	200K	1	2	30A	20A	200K	0.84			N. ANCIL. RM. & N.VENT LTG.
N. PLATF SAFETY WALK LTG.-O.B.		1.56		30A	20A		3	4		20A			0.84		
BETHESDA TPSS EMER. LTG.			1.0	30A	20A		5	6		20A				0.64	N.TUNNEL EMERG.LTG(FBNEL-I.B.)
N. TUNNEL EMER. LTG.(FBNEL-OB.)	0.64				20A		7	8	30A	20A		0.64			
		0.64		30A	20A		9	10		20A			0.64		
			0.64		20A		11	12		20A				4.06	SUBFEED PANEL "PEH"
SUBFEED PANEL "NEL"	1.0				20A		13	14	30A	20A		4.06			
		0.93		30A	20A		15	16		20A					
			0.6		20A		17	18	30A	20A			3.89		SPARE
SPARE				30A	20A		19	20	30A	20A					SPARE
BUSSED SPACE				30A	-	-	21	22	30A	-	-				BUSSED SPACE
BUSSED SPACE				30A	-	-	23	24	30A		-				BUSSED SPACE
	3.2	3.13	2.24									5.54	5.37	4.7	

CONNECTED LOAD: AØ 8.74 KVA 31.55A
BØ 8.5 KVA 30.69A
CØ 6.94 KVA 25.05A
TOTAL: 24.18 KVA

SN GND

ESTIMATED DEMAND LOAD: 24.18 KVA
SUMMER OR WINTER

PANEL NO. SEH (EMERGENCY)
TYPE: LIGHTING 480v/277V 3ø 4W WITH GROUND BUS

LOCATION: SOUTH AC SWITCHBOARD ROOM
MAIN: LUGS ONLY 100A
PANEL MOUNTING: SURFACE TOP FEED

DESCRIPTION	CONNECTED LOAD (KVA) AØ	BØ	CØ	RATING SWITCH	FUSE	A.I.C.	CKT. NO.	CKT. NO.	RATING SWITCH	FUSE	A.I.C.	CONNECTED LOAD (KVA) AØ	BØ	CØ	DESCRIPTION
S.PLATF SAFETY WALK LTG.-I.B.	1.3			30A	20A	200K	1	2	30A	20A	200K	1.56			S. ANCIL. RM. LIGHTING
S.PLATF SAFETY WALK LTG.-O.B.		1.3		30A	20A		3	4	30A	20A					SPARE
S.TUNNEL EMER.LTG.(FBSEL-I.B.)			0.5		20A		5	6	30A	20A					SPARE
	0.5			30A	20A		7	8		20A		0.5			S.TUNNEL EMER.LTG.(FBSEL-O.B.)
		0.5			20A		9	10	30A	20A			0.5		
COMMUNICATION ROOM FEEDER			4.0		25A		11	12		20A				0.5	
	4.0			30A	25A		13	14	30A	20A		0.67			SUBFEED PANEL "SEL"
		4.0			25A		15	16		20A			0.67		
SPARE				30A	20A		17	18	30A	20A				0.67	
SPARE				30A	20A		19	20	30A						BUSSED SPACE
BUSSED SPACE				30A			21	22	30A						BUSSED SPACE
BUSSED SPACE				30A			23	24	30A						BUSSED SPACE
	5.8	5.8	4.5									2.73	1.17	1.17	

CONNECTED LOAD: AØ 8.53 KVA 30.79A
BØ 6.97 KVA 25.16A
CØ 5.65 KVA 20.4 A
TOTAL: 21.26 KVA

SN GND

ESTIMATED DEMAND LOAD: 21.16 KVA
SUMMER OR WINTER

PANEL NO. "NEL" (EMERGENCY)
TYPE: LIGHTING 208/120V 3ø-4W WITH GROUND BUS

LOCATION: NORTH A.C. SWITCHBOARD ROOM
MAIN: 60A SWITCH FUSED AT 40A
PANEL MOUNTING: SURFACE TOP FEED

DESCRIPTION	CONNECTED LOAD (KVA) AØ	BØ	CØ	RATING SWITCH	FUSE	A.I.C.	CKT. NO.	CKT. NO.	RATING SWITCH	FUSE	A.I.C.	CONNECTED LOAD (KVA) AØ	BØ	CØ	DESCRIPTION
ETS. LIGHTS	1.0			30A	20A	200K	1	2	30A		200K				EMER. LTG. FOR ESCAL.
PLATF. ELEV. EMER. LOAD		0.925					3	4							
N. VENT SHAFT LTG.			0.6				5	6							
BUSSED SPACE					-	-	7	8		-	-				BUSSED SPACE
					-	-	9	10		-	-				
					-	-	11	12		-	-				
							13	14							
							15	16							
							17	18							
							19	20							
							21	22							
							23	24							
	1.0	0.925	0.6												

CONNECTED LOAD: AØ 1.0 KVA 8.3A
BØ 0.93 KVA 7.75A
CØ 0.6 KVA 5.0A
TOTAL: 2.53 KVA

SN GND

ESTIMATED DEMAND LOAD: 2.53 KVA
SUMMER OR WINTER

PANEL NO. PEH (EMERGENCY)
TYPE: LIGHTING 480/277V 3ø 4W WITH GROUND BUS

LOCATION CLEANERS ROOM - PASSAGEWAY
MAIN LUGS ONLY 100A
PANEL MOUNTING SURFACE BOTTOM FEED

DESCRIPTION	CONNECTED LOAD (KVA) AØ	BØ	CØ	RATING SWITCH	FUSE	A.I.C.	CKT. NO.	CKT. NO.	RATING SWITCH	FUSE	A.I.C.	CONNECTED LOAD (KVA) AØ	BØ	CØ	DESCRIPTION
PYLON AND MEZZANINE EMER. LTG.	2.42			30A	20A	200K	1	2		20A	200K	1.64			SUB FEED PANEL "PEL"
		2.25		30A	20A		3	4	30A	20A			1.64		
			2.42	30A	20A		5	6		20A				1.64	
SPARE				30A	20A		7	8	30A	20A					SPARE
				30A			9	10	30A						BUSSED SPACE
BUSSED SPACE				30A			11	12	30A						BUSSED SPACE
							13	14							
							15	16							
							17	18							
							19	20							
							21	22							
							23	24							
	2.42	2.25	2.42									1.64	1.64	1.64	

CONNECTED LOAD: AØ 4.06 KVA 14.66A
BØ 3.89 KVA 14.04A
CØ 4.06 KVA 14.60A
TOTAL: 12.01 KVA

SN GND

ESTIMATED DEMAND LOAD: 12.01 KVA
SUMMER OR WINTER

PANEL NO. SDC (EMERGENCY)
TYPE: 125V D.C.
ENCLOSURE: PAINTED RED

LOCATION: SOUTH AC SWITHCHBOARD ROOM
MAIN: CIRCUIT BREAKER 100A FRAME 100A TRIP 10,000 AIC
PANEL MOUNTING: SURFACE TOP FEED

DESCRIPTION	CIRCUIT BREAKER FRAME	TRIP	A.I.C.	CKT. NO.	CKT. NO.	CIRCUIT BREAKER FRAME	TRIP	A.I.C.	DESCRIPTION
SWITCHGEAR AND SPARES	100A	20A	10,000	1	2	100A	20A	10,000	SWITCHGEAR AND SPARES
		30A		3	4		30A		
		50A		5	6		50A		

PANEL NO. NDC (EMERGENCY)
TYPE: 125V D.C.
ENCLOSURE: PAINTED RED

LOCATION: NORTH AC SWITCHGEAR ROOM
MAIN: CIRCUIT BREAKER 100A FRAME 100A TRIP 10,000 AIC
PANEL MOUNTING: SURFACE TOP FEED

DESCRIPTION	CIRCUIT BREAKER FRAME	TRIP	A.I.C.	CKT. NO.	CKT. NO.	CIRCUIT BREAKER FRAME	TRIP	A.I.C.	DESCRIPTION
SWITCHGEAR AND SPARES	100A	20A	10,000	1	2	100A	20A	10,000	SWITCHGEAR AND SPARES
		30A		3	4		30A		
		50A		5	6		50A		

WASHINGTON METROPOLITAN AREA TRANSIT AUTHORITY
AS-BUILT CONDITION
SEP 14 1982
ENGINEER DATE

DESIGNED	B. STAUFFER	6-10-79 DATE
DRAWN	D. JACKSON	8-11-79 DATE
CHECKED	H.B. ZACKRISON	6-16-80 DATE
APPROVED	H.B. ZACKRISON	6-16-80 DATE

REFERENCE DRAWINGS

NUMBER	DESCRIPTION

REVISIONS

DATE	BY	DESCRIPTION
9-25-80	H.Z.	GENERAL REVISION
7-12-83	HTN	1 MOD. CONDUIT & CIRCUITS AT BETH.STA. PER PCO-7, AS-BUILT

BOARD OF EXAMINERS AND REGISTRATION OF ARCHITECTS 3889-R STATE OF MARYLAND

WASHINGTON METROPOLITAN AREA TRANSIT AUTHORITY

MATHEWS • CHATELAIN • BEALL
ENGINEERS AND ARCHITECTS
SECTION DESIGNER
SUBMITTED Grinley G. Greves DATE 8-15-80

DE LEUW, CATHER & COMPANY
GENERAL ENGINEERING CONSULTANT

HARRY WEESE & ASSOCIATES
GENERAL ARCHITECTURAL CONSULTANT
APPROVED

ROCKVILLE ROUTE
BETHESDA STATION
PANELBOARD SCHEDULES

SCALE NONE
DRAWING NO. FAII-E-45
M334-194

PANEL NO. "PEL" (EMERGENCY)
TYPE: LIGHTING 208/120V 3Ø-4W WITH GROUND BUS

LOCATION: CLEANER'S ROOM - PASSAGEWAY
MAIN: 60A SWITCH FUSED AT 40A
PANEL MOUNTING: SURFACE TOP FEED

DESCRIPTION	CONNECTED LOAD (KVA) AØ	BØ	CØ	RATING SWITCH	FUSE	A.I.C.	CKT. NO.
SPARE				30A	20A	200K	1
KIOSK EMERGENCY LOAD		2.0			25A		3
			2.0		25A		5
SPARE							7
BUSSED SPACE					-	-	9
BUSSED SPACE					-	-	11
							13
							15
							17
							19
							21
							23
		2.0	2.0				

CKT. NO.	RATING SWITCH	FUSE	A.I.C.	CONNECTED LOAD (KVA) AØ	BØ	CØ	DESCRIPTION
2	30A	20A	200K	0.93			ENT. ELEV. EMER. LOAD
4							SPARE
6							
8							
10		-	-				BUSSED SPACE
12		-	-				BUSSED SPACE
14							
16							
18							
20							
22							
24							
				0.93			

SN GND

CONNECTED LOAD: AØ 0.93 KVA 7.75A
BØ 2.0 KVA 16.7A
CØ 2.0 KVA 16.7A
TOTAL: 4.93 KVA

ESTIMATED DEMAND LOAD: 4.93 KVA
SUMMER OR WINTER

PANEL NO. "SEL" (EMERGENCY)
TYPE: LIGHTING 208/120V 3Ø-4W WITH GROUND BUS

LOCATION: SOUTH A.C. SWITCHBOARD ROOM
MAIN: 60A SWITCH FUSED AT 40A
PANEL MOUNTING: SURFACE TOP FEED

DESCRIPTION	CONNECTED LOAD (KVA) AØ	BØ	CØ	RATING SWITCH	FUSE	A.I.C.	CKT. NO.
SPARE				30A	20A	200K	1
ELM ST. VENT SHAFT LTG.		1.0					3
ETS LIGHTS			1.0				5
BUSSED SPACE					-	-	7
					-	-	9
					-	-	11
							13
							15
							17
							19
							21
							23
		1.0	1.0				

CKT. NO.	RATING SWITCH	FUSE	A.I.C.	CONNECTED LOAD (KVA) AØ	BØ	CØ	DESCRIPTION
2	30A	20A	200K				SPARE
4							
6							
8		-	-				BUSSED SPACE
10		-	-				
12		-	-				
14							
16							
18							
20							
22							
24							

SN GND

CONNECTED LOAD: BØ 1.0 KVA 8.33A
CØ 1.0 KVA 8.33A
TOTAL: 2.0 KVA

ESTIMATED DEMAND LOAD: 2.0 KVA
SUMMER OR WINTER

PANEL NO.
TYPE:

LOCATION:
MAIN:
PANEL MOUNTING:

DESCRIPTION	CONNECTED LOAD (KVA) AØ	BØ	CØ	RATING SWITCH	FUSE	A.I.C.	CKT. NO.
							1
							3
							5
							7
							9
							11
							13
							15
							17
							19
							21
							23

CKT. NO.	RATING SWITCH	FUSE	A.I.C.	CONNECTED LOAD (KVA) AØ	BØ	CØ	DESCRIPTION
2							
4							
6							
8							
10							
12							
14							
16							
18							
20							
22							
24							

SN GND

PANEL NO.
TYPE:

LOCATION
MAIN
PANEL MOUNTING

DESCRIPTION	CONNECTED LOAD (KVA) AØ	BØ	CØ	RATING SWITCH	FUSE	A.I.C.	CKT. NO.
							1
							3
							5
							7
							11
							13
							15
							17
							19
							21
							23
							25

CKT. NO.	RATING SWITCH	FUSE	A.I.C.	CONNECTED LOAD (KVA) AØ	BØ	CØ	DESCRIPTION
2							
4							
6							
8							
10							
12							
14							
16							
18							
20							
22							
24							

SN GND

PANEL NO.
TYPE:

LOCATION:
MAIN:
PANEL MOUNTING:

DESCRIPTION	CIRCUIT BREAKER FRAME	TRIP	A.I.C.	CKT. NO.
				1
				3
				5

CKT. NO.	CIRCUIT BREAKER FRAME	TRIP	A.I.C.	DESCRIPTION
2				
4				
6				

PANEL NO.
TYPE:

LOCATION:
MAIN:
PANEL MOUNTING:

DESCRIPTION	CIRCUIT BREAKER FRAME	TRIP	A.I.C.	CKT. NO.
				1
				3
				5

CKT. NO.	CIRCUIT BREAKER FRAME	TRIP	A.I.C.	DESCRIPTION
2				
4				
6				

WASHINGTON METROPOLITAN AREA TRANSIT AUTHORITY
AS-BUILT CONDITION
RESIDENT ENGINEER DATE SEP 19 1983

DESIGNED	B. STAUFFER	8/1/79 DATE
DRAWN	B.N. JOHNSON	1/25/80 DATE
CHECKED	H.B. ZACKRISON	8/15/80 DATE
APPROVED	H.B. ZACKRISON	8/15/80 DATE

REFERENCE DRAWINGS

NUMBER	DESCRIPTION

REVISIONS

DATE	BY	DESCRIPTION
9-25-80	H.Z.	REVISED PANEL "PEL"

3889-R

WASHINGTON METROPOLITAN AREA TRANSIT AUTHORITY

MATHEWS • CHATELAIN • BEALL
ENGINEERS AND ARCHITECTS
SECTION DESIGNER
SUBMITTED DATE 8-15-80

DE LEUW, CATHER & COMPANY
GENERAL ENGINEERING CONSULTANT

HARRY WEESE & ASSOCIATES
GENERAL ARCHITECTURAL CONSULTANT
APPROVED

ROCKVILLE ROUTE
BETHESDA STATION
PANELBOARD SCHEDULES

SCALE NONE
DRAWING NO. FAII-E-145
M334-195

LOAD CENTER NTT-1 AND OTHERS (NON-ESSENTIAL) SEE NOTE A

TRANSFORMER SIZE 5KVA
RATING 480V TO 240/120V 1Ø 3W

LOCATION SEE NOTE A
PRIMARY BREAKER 2P 20A 480V 14,000 AIC
SECONDARY BREAKER 2P 25A 240V 10,000 AIC

DESCRIPTION	CONNECTED LOAD (KVA) AØ	BØ	CØ	CIRCUIT BREAKER FRAME	TRIP	AIC	CKT. NO.
TUNNEL RECEPTACLES	0.54			100A	20A	10,000	1
↓			0.36	↓	↓	↓	3
	0.54		0.36				

CKT. NO.	CIRCUIT BREAKER FRAME	TRIP	AIC	CONNECTED LOAD (KVA) AØ	BØ	CØ	DESCRIPTION
2	100A	20A	10,000	0.36			TUNNEL RECEPTACLES
4	↓	↓	↓			0.54	↓
				0.36		0.54	

SN. GND.

CONNECTED LOAD: AØ 0.9 KVA 7.5A
CØ 0.9 KVA 7.5A
TOTAL : 1.8 KVA

ESTIMATED DEMAND LOAD: 1.8 KVA
SUMMER OR WINTER

LOAD CENTER NTT-9 AND (ESSENTIAL)

TRANSFORMER SIZE 5 KVA
RATING 480V TO 240/120V 1Ø 3W

LOCATION WEST VIRGINIA FAN SHAFT ADIT
PRIMARY BREAKER 2P 20A 480V 14,000 AIC
SECONDARY BREAKER 2P 25A 240V 10,000 AIC

DESCRIPTION	CONNECTED LOAD (KVA) AØ	BØ	CØ	CIRCUIT BREAKER FRAME	TRIP	A.I.C.	CKT. NO.
SPARE				100A	20A	10,000	1
SPARE				↓	↓	↓	3

CKT. NO.	CIRCUIT BREAKER FRAME	TRIP	A.I.C.	CONNECTED LOAD (KVA) AØ	BØ	CØ	DESCRIPTION
2	100A	20A	10,000	0.9			LIGHTING
4	↓	↓	↓				SPARE
				0.9			

SN. GND.

ESTIMATED DEMAND LOAD: 0.9 KVA
SUMMER OR WINTER

NOTES:

A. NTT-1 AT STA. 399+56-O.B.
NTT-2 AT STA. 407+96-O.B.
NTT-3 AT STA. 415+96-O.B.
NTT-6 AT STA. 407+96-I.B.
NTT-7 AT STA. 415+96-I.B.
STT-3 AT STA. 436+35-O.B.
STT-4 AT STA. 436+35-I.B.
STT-5 AT STA. 428+35-O.B.
STT-6 AT STA. 428+35-I.B.

LOAD CENTER NTT-8 (NON-ESSENTIAL)

TRANSFORMER SIZE 5 KVA
RATING 480V TO 240/120V 1Ø 3W

LOCATION STA. 421 + 95 - I.B.
PRIMARY BREAKER 2P 20A 480V 14,000 AIC
SECONDARY BREAKER 2P 25A 240V 10,000 AIC

DESCRIPTION	CONNECTED LOAD (KVA) AØ	BØ	CØ	CIRCUIT BREAKER FRAME	TRIP	A.I.C.	CKT. NO.
TUNNEL RECEPTACLES	0.36			100A	20A	10,000	1
↓			0.18	↓	↓	↓	3
	0.36		0.18				

CKT. NO.	CIRCUIT BREAKER FRAME	TRIP	A.I.C.	CONNECTED LOAD (KVA) AØ	BØ	CØ	DESCRIPTION
2	100A	20A	10,000	0.18			TUNNEL RECEPTACLES
4	↓	↓	↓			0.36	↓
				0.18		0.36	

SN. GND.

CONNECTED LOAD: AØ 0.54 KVA 4.5A
CØ 0.54 KVA 4.5A
TOTAL : 1.08 KVA

ESTIMATED DEMAND LOAD: 1.08 KVA
SUMMER OR WINTER

LOAD CENTER NTT-10 AND (EMERGENCY)

TRANSFORMER SIZE 5 KVA
RATING 480V to 240/120V 1Ø 3W

LOCATION WEST VIRGINIA FAN SHAFT ADIT
PRIMARY BREAKER 2P 20A 480V 14,000 AIC
SECONDARY BREAKER 2P 25A 240V 10,000 AIC

DESCRIPTION	CONNECTED LOAD (KVA) AØ	BØ	CØ	CIRCUIT BREAKER FRAME	TRIP	A.I.C.	CKT NO.
SPARE				100A	20A	10,000	1
SPARE				↓	↓	↓	3

CKT. NO.	CIRCUIT BREAKER FRAME	TRIP	A.I.C.	CONNECTED LOAD (KVA) AØ	BØ	CØ	DESCRIPTION
2	100A	20A	10,000	1.0			LIGHTING
4	↓	↓	↓				SPARE
				1.0			

SN GND

ESTIMATED DEMAND LOAD: 1.0 KVA
SUMMER OR WINTER.

LOAD CENTER NTT-5 (NON-ESSENTIAL)

TRANSFORMER SIZE 5 KVA
RATING 480V TO 240/120V 1Ø 3W

LOCATION STA. 399 + 56 - I.B.
PRIMARY BREAKER 2P 20A 480V 14,000 AIC
SECONDARY BREAKER 2P 25A 240V 10,000 AIC

DESCRIPTION	CONNECTED LOAD (KVA) AØ	BØ	CØ	CIRCUIT BREAKER FRAME	TRIP	A.I.C.	CKT. NO.
TUNNEL RECEPTACLES	0.54			100A	20A	10,000	1
↓			0.54	↓	↓	↓	3
	0.54		0.54				

CKT. NO.	CIRCUIT BREAKER FRAME	TRIP	A.I.C.	CONNECTED LOAD (KVA) AØ	BØ	CØ	DESCRIPTION
2	100A	20A	10,000	0.72			TUNNEL RECEPTACLES
4	↓	↓	↓			0.36	RECEPT. IN N. VENT SHAFT
				0.72		0.72	

SN. GND.

CONNECTED LOAD: AØ 1.26 KVA 10.5A
CØ 0.9 KVA 7.5A
TOTAL : 2.16 KVA

ESTIMATED DEMAND LOAD: 2.16 KVA
SUMMER OR WINTER

~~LOAD CENTER PEL~~

~~TRANSFORMER SIZE 15KVA~~
~~RATING 480V TO 208Y/120V 3Ø 4W~~

~~LOCATION CLEANER'S ROOM-PASSAGEWAY.~~
~~PRIMARY BREAKER 3P 40A 480V 14,000 AIC~~
~~SECONDARY BREAKER 3P 50A 208V 10,000 AIC~~

DESCRIPTION	CONNECTED LOAD (KVA) AØ	BØ	CØ	CIRCUIT BREAKER FRAME	TRIP	AIC	CKT. NO.
KIOSK EMER. LOAD	1.5			100A	20A	10,000	1
↓		1.5					3
↓			1.5				5
SPARE							7
↓							9
↓							11
	1.5	1.5	1.5				

CKT NO.	CIRCUIT BREAKER FRAME	TRIP	AIC	CONNECTED LOAD (KVA) AØ	BØ	CØ	DESCRIPTION
2	100A	20A	10,000	0.925			ENT. ELEV. EMER. LOAD
4							SPARE
6							
8							
10							
12	↓	↓	↓				
				0.925			

SN. GND.

CONNECTED LOAD: AØ 2.43 KVA 20.25A
BØ 1.5 KVA 12.5A
CØ 1.5 KVA 12.5A
TOTAL 5.43 KVA

NOT USED

ESTIMATED DEMAND LOAD: 5.43 KVA
SUMMER OR WINTER

LOAD CENTER NTT-4 (NON-ESSENTIAL)

TRANSFORMER SIZE 5 KVA
RATING 480V TO 240/120V 1Ø 3W

LOCATION STA. 421 + 95 - O.B.
PRIMARY BREAKER 2P 20A 480V 14,000 AIC
SECONDARY BREAKER 2P 25A 240V 10,000 AIC

DESCRIPTION	CONNECTED LOAD (KVA) AØ	BØ	CØ	CIRCUIT BREAKER FRAME	TRIP	A.I.C.	CKT. NO.
TUNNEL RECEPTACLES	0.36			100A	20A	10,000	1
↓			0.36	↓	↓	↓	3
	0.36		0.36				

CKT. NO.	CIRCUIT BREAKER FRAME	TRIP	A.I.C.	CONNECTED LOAD AØ	BØ	CØ	DESCRIPTION
2	100A	20A	10,000	0.36			TUNNEL RECEPTACLES
4	↓	↓	↓			0.36	RECEPT. IN W VA. FAN SHAFT
				0.36		0.36	

SN. GND.

CONNECTED LOAD: AØ 0.72 KVA 6A
CØ 0.72 KVA 6A
1.44 KVA

ESTIMATED DEMAND LOAD: 1.44 KVA
SUMMER OR WINTER

~~LOAD CENTER NEL~~

~~TRANSFORMER SIZE 5 KVA~~
~~RATING 480V TO (208)240V 1Ø 3W~~

~~LOCATION NORTH AC SWITCHBOARD ROOM~~
~~PRIMARY BREAKER 2P 20A 480V 14,000 AIC~~
~~SECONDARY BREAKER 2P 25A 240V 10,000 AIC~~

DESCRIPTION	CONNECTED LOAD (KVA) AØ	BØ	CØ	CIRCUIT BREAKER FRAME	TRIP	A.I.C.	CKT NO.
ETS LIGHTS	1.0			100A	20A	10,000	1
PLATF. ELEV. EMER. LOAD		0.925		↓	↓	↓	3
	1.0	0.925					

CKT. NO.	CIRCUIT BREAKER FRAME	TRIP	A.I.C.	CONNECTED LOAD (KVA) AØ	BØ	CØ	DESCRIPTION
2	100A	20A	10,000				SPARE
4	↓	↓	↓				↓

CONNECTED LOAD AØ 1.0 KVA 8.3A
BØ 0.93 KVA 7.75A
1.93 KVA

NOT USED

ESTIMATED DEMAND LOAD: 1.93 KVA
SUMMER OR WINTER

WASHINGTON METROPOLITAN AREA TRANSIT AUTHORITY
AS BUILT CONDITION
BY RESIDENT ENGINEER SEP 19 1980

DESIGNED B. STAUFFER	1-18-79 DATE	
DRAWN G. GRAYTON	1-25-79 DATE	
CHECKED H.B. ZACKRISON	6-16-80 DATE	
APPROVED H.B. ZACKRISON	6-16-80 DATE	

REFERENCE DRAWINGS

NUMBER	DESCRIPTION

REVISIONS

DATE	BY	DESCRIPTION
9-25-80	H.Z.	REVISED NOTES & TWO LOAD CENTERS

BOARD OF EXAMINERS AND REGISTRATION OF ARCHITECTS 3889-R STATE OF MARYLAND

WASHINGTON METROPOLITAN AREA TRANSIT AUTHORITY

MATHEWS • CHATELAIN • BEALL
ENGINEERS AND ARCHITECTS
SECTION DESIGNER
SUBMITTED Stanley G. Grass DATE 8-15-80

DE LEUW, CATHER & COMPANY
GENERAL ENGINEERING CONSULTANT

HARRY WEESE & ASSOCIATES
GENERAL ARCHITECTURAL CONSULTANT
APPROVED

ROCKVILLE ROUTE
BETHESDA STATION
LOAD CENTER SCHEDULES

SCALE NONE
DRAWING NO. FAII-E-46
M334-196

LOAD CENTER M (ESSENTIAL)
TRANSFORMER SIZE 15KVA
RATING 480V TO 208Y/120V 3Ø 4W

DESCRIPTION	CONNECTED LOAD (KVA) AØ	BØ	CØ	CIRCUIT BREAKER FRAME	TRIP	AIC	CKT. NO.
RECEPTACLES	0.4			100A	20A	10,000	1
		0.4					3
			0.4				5
PIPE HEAT TRACING	0.31						7
							9
							11
	0.71	0.4	0.4				

CONNECTED LOAD: AØ 1.97 KVA 16.4A
BØ 1.66 KVA 13.48A
CØ 1.8 KVA 15A
TOTAL: 5.43 KVA

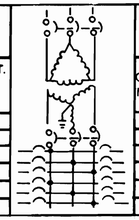

SN. GND.

LOCATION CLEANERS ROOM - PASSAGEWAY
PRIMARY BREAKER 3P 40A 480V 14,000 AIC
SECONDARY BREAKER 3P 50A 208V 10,000 AIC

CKT NO.	CIRCUIT BREAKER FRAME	TRIP	AIC	CONNECTED LOAD (KVA) AØ	BØ	CØ	DESCRIPTION
2	100A	20A	10,000	1.26			ENT. ELEV. AUX. SUPPLY
4					1.26		
6						1.4	
8							P - TRAP HEAT TRACING
10							
12							
				1.26	1.26	1.4	

ESTIMATED DEMAND LOAD

ITEM	CONN. LOAD	D.F.	SUMMER	WINTER
RTG.	0.31	0.5		0.155
MISC.	5.12	1.0	5.12	5.12
	5.43		5.12	5.28

LOAD CENTER SML
TRANSFORMER SIZE 5 KVA
RATING 480 to 240/120V 1Ø 3W

DESCRIPTION	CONNECTED LOAD (KVA) AØ	BØ	CØ	CIRCUIT BREAKER FRAME	TRIP	A.I.C.	CKT. NO.
LIGHTING IN A.C.U. & V.U.	0.3			100A	20A	10,000	1
SPARE							3

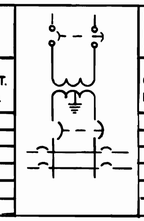

SN. GND.

TOTAL CONNECTED LOAD: AØ 0.3 KVA 2.5A

LOCATION SOUTH MECHANICAL ROOM-MEZZANINE
PRIMARY BREAKER 2P 20A 480V 14,000 AIC
SECONDARY BREAKER 2P 25A 240V 10,000 AIC

CKT. NO.	CIRCUIT BREAKER FRAME	TRIP	A.I.C.	CONNECTED LOAD (KVA) AØ	BØ	CØ	DESCRIPTION
2	100A	20A	10,000				SPARE
4							

ESTIMATED DEMAND LOAD: 0.3 KVA
SUMMER OR WINTER

LOAD CENTER OL (ESSENTIAL)
TRANSFORMER SIZE 15 KVA
RATING 480 TO 208Y/120V 3Ø4W

DESCRIPTION	CONNECTED LOAD (KVA) AØ	BØ	CØ	CIRCUIT BREAKER FRAME	TRIP	A.I.C.	CKT. NO.
FUT. LTG. & SPARES				100A	20A	10,000	1
							3
							5
							7
							9
							11

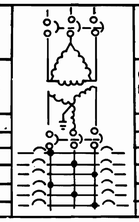

SN. GND.

LOCATION NORTH VENT SHAFT UPPER STRUCTURE
PRIMARY BREAKER 3P 40A 480V 14,000 AIC
SECONDARY BREAKER 3P 50A 208V 10,000 AIC

CKT. NO.	CIRCUIT BREAKER FRAME	TRIP	A.I.C.	CONNECTED LOAD (KVA) AØ	BØ	CØ	DESCRIPTION
2	100A	20A	10,000				FUT. LTG. & SPARES
4							
6							
8							
10							
12							

ESTIMATED DEMAND LOAD: 1.2 KVA
(FUTURE) SUMMER OR WINTER

LOAD CENTER
TRANSFORMER SIZE
RATING

DESCRIPTION	CONNECTED LOAD (KVA) AØ	BØ	CØ	CIRCUIT BREAKER FRAME	TRIP	A.I.C.	CKT NO.

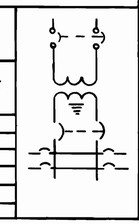

SN GND

LOCATION
PRIMARY BREAKER
SECONDARY BREAKER

CKT. NO.	CIRCUIT BREAKER FRAME	TRIP	A.I.C.	CONNECTED LOAD (KVA) AØ	BØ	CØ	DESCRIPTION

LOAD CENTER MPL (NON-ESSENTIAL)
TRANSFORMER SIZE 15 KVA
RATING 480V to 208V/120V 3Ø 4W

DESCRIPTION	CONNECTED LOAD (KVA) AØ	BØ	CØ	CIRCUIT BREAKER FRAME	TRIP	A.I.C.	CKT. NO.
ELECTRIC WATER HEATER	1.6			100A	20A	10,000	1
PIPE HEAT TRACING		1.58					3
			1.58				5
	1.18						7
SPARE							9
							11
	2.78	1.58	1.58				

CONNECTED LOAD
AØ 2.88 KVA 24A
BØ 1.58 KVA 13.17A
CØ 1.58 KVA 13.17A
TOTAL: 6.04 KVA

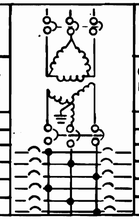

SN. GND.

LOCATION MECHANICAL ROOM - PASSAGEWAY
PRIMARY BREAKER 3P 40A 14,000 A.I.C.
SECONDARY BREAKER 3P 50A 208V 10,000 A.I.C.

CKT. NO.	CIRCUIT BREAKER FRAME	TRIP	A.I.C.	CONNECTED LOAD (KVA) AØ	BØ	CØ	DESCRIPTION
2	100A	20A	10,000	0.1			LIGHT IN ACU #3
4							SPARE
6							
8							
10							
12							
				0.1			ESTIMATED DEMAND LOAD

ITEM	CONN. LOAD	D.F.	SUMMER	WINTER
EWH	1.6	0.15	0.24	0.24
L/TB.	0.1	0.1	0.01	0.01
RTG.	4.34	0.5		2.17
	6.04		0.25	2.42

LOAD CENTER NML (NON-ESSENTIAL)
TRANSFORMER SIZE 5 KVA
RATING 480 to 240/120V 1Ø3W

DESCRIPTION	CONNECTED LOAD (KVA) AØ	BØ	CØ	CIRCUIT BREAKER FRAME	TRIP	A.I.C.	CKT. NO.
LIGHTING IN A.C.U. & V.U.	0.3			100A	20A	10,000	1
FAN #6 1/3 HP			0.86				3
	0.3						

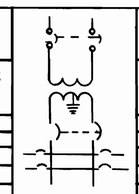

SN. GND.

CONNECTED LOAD: AØ 0.3 KVA 2.5A
CØ 0.86KVA 7.2A
TOTAL: 1.16KVA

LOCATION NORTH MECHANICAL ROOM-MEZZANINE
PRIMARY BREAKER 2P 20A 480V 14,000 AIC
SECONDARY BREAKER 2P 20A 240V 10,000 AIC

CKT. NO.	CIRCUIT BREAKER FRAME	TRIP	A.I.C.	CONNECTED LOAD AØ	BØ	CØ	DESCRIPTION
2	100A	20A	10,000				SPARE
4							

ESTIMATED DEMAND LOAD: 1.16 KVA SUMMER OR WINTER

WASHINGTON METROPOLITAN AREA TRANSIT AUTHORITY
AS-BUILT CONDITION
BY: PROJECT ENGINEER DATE

DESIGNED	B. STAUFFER	2-20-79 DATE
DRAWN	B.N. JOHNSON	4-2-79 DATE
CHECKED	H.B. ZACKRISON	8-18-80 DATE
APPROVED	H.B. ZACKRISON	8-18-80 DATE

REFERENCE DRAWINGS

NUMBER	DESCRIPTION

REVISIONS

DATE	BY	DESCRIPTION
7-12-83	HTN	1 REVISED PER PCO-7, AS BUILT

BOARD OF EXAMINERS AND REGISTRATION OF ARCHITECTS 3889-R STATE OF MARYLAND

WASHINGTON METROPOLITAN AREA TRANSIT AUTHORITY

MATHEWS • CHATELAIN • BEALL
ENGINEERS AND ARCHITECTS
SECTION DESIGNER
SUBMITTED Jerilyn A. Fraess DATE 8-15-80

DE LEUW, CATHER & COMPANY
GENERAL ENGINEERING CONSULTANT
HARRY WEESE & ASSOCIATES
GENERAL ARCHITECTURAL CONSULTANT
APPROVED

ROCKVILLE ROUTE
BETHESDA STATION
LOAD CENTER SCHEDULES

SCALE NONE
DRAWING NO. FAII-E-146
M334-197

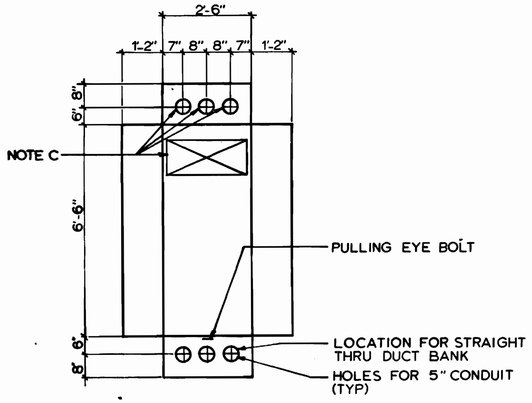

1 DETAIL
PULLBOX DEVELOPED FRONT ELEVATION
SCALE: 1/2" = 1'-0"

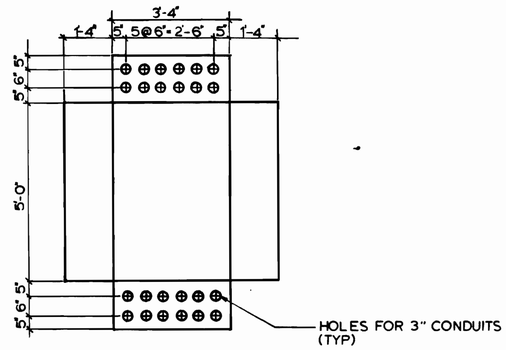

2 DETAIL
PULLBOX DEVELOPED FRONT ELEVATION
SCALE: 1/2" = 1'-0"

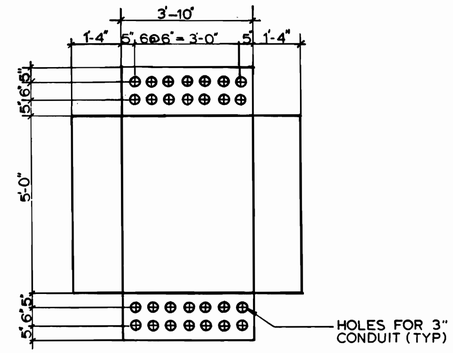

3 DETAIL
PULLBOX DEVELOPED FRONT ELEVATION
SCALE: 1/2" = 1'-0"

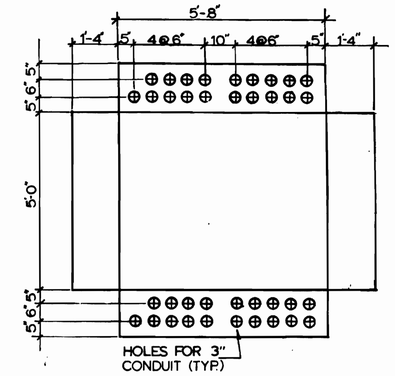

4 DETAIL
PULLBOX DEVELOPED FRONT ELEVATION
SCALE: 1/2" = 1'-0"

NOTES

A. FOR ALL PULLBOXES, TOP ENTRY CONDUITS SHALL TERMINATE WITH SEALING BUSHINGS, (DETAIL C-1 ON DWG. E-48). BOTTOM ENTRY CONDUITS SHALL TERMINATE WITH CABLE SUPPORTS (DETAIL C-2 ON DWG. E-48).

B. NO BOTTOM ENTRY CABLE SUPPORTS ARE REQUIRED FOR PULLBOXES BP1A, BP2A, BP3A AND BP4A.

C. FOR PULLBOX BP-5 ONLY, OMIT TOP CONDUIT ENTRY HOLES AND PROVIDE OPENING AS SHOWN FOR DUCTBANK. PROVIDE CONTINUOUS BEAD OF SEALANT AROUND EDGE OF OPENING. BOTTOM ENTRY CONDUITS SHALL TERMINATE WITH CABLE SUPPORTS (DETAIL C-2 ON DWG. E-48).

[1] D. 1. INSTALL NEMA 1 PULL BOXES AT NORTH VENT SHAFT
2. SEAL PULL BOX SEAMS USING SILICONE SEALANT
3. DELETE STEEL NIPPLE AT THE TERMINATION OF CONDUITS IN PULL BOXES.

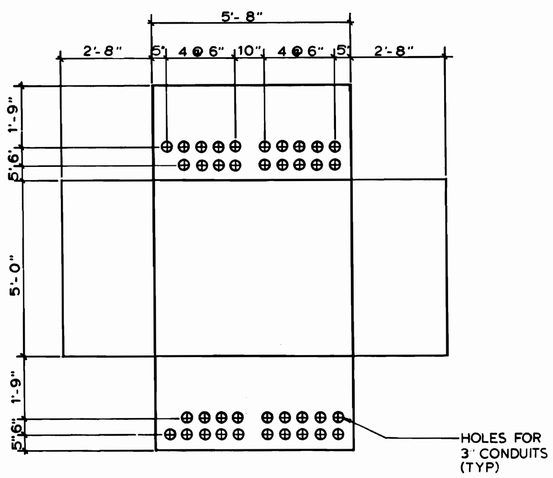

5 DETAIL
PULLBOX DEVELOPED FRONT ELEVATION
SCALE: 1/2" = 1'-0"

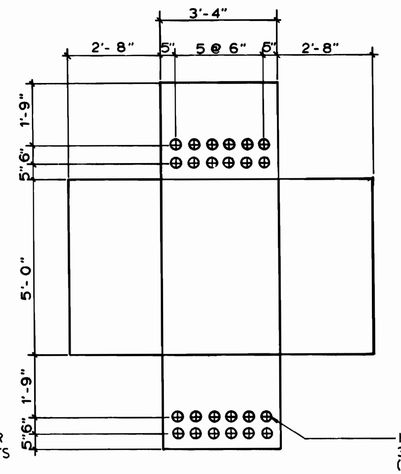

6 DETAIL
PULLBOX DEVELOPED FRONT ELEVATION
SCALE: 1/2" = 1'-0"

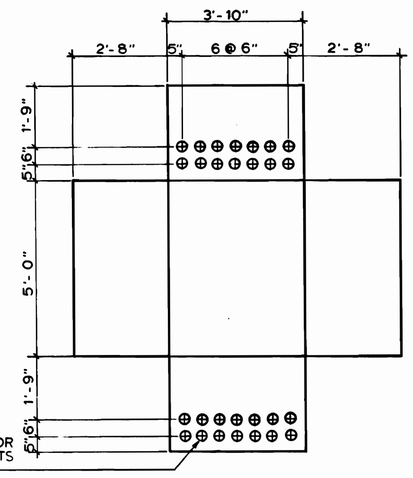

7 DETAIL
PULLBOX DEVELOPED FRONT ELEVATION
SCALE: 1/2" = 1'-0"

PULLBOX SCHEDULE

DESCRIPTION	DETAIL	PURPOSE	LOCATION	DWG	REMARKS
BP-1A, 1B 1C, 1D	3	TRACTION POWER POSITIVE CABLES	BETHESDA N VENT SHAFT	E-60	NOTES A,B,D [1]
BP-1E	7				NOTES A,D [1]
BP-2A, 2B 2C, 2D	4				NOTES A,B,D [1]
BP-2E	5				NOTE A,D [1]
BP-3A,3B,3C,3D 4A,4B,4C,4D	2	TRACTION POWER NEGATIVE CABLES			NOTES A,B,D [1]
BP-3E, 4E	6				NOTES A,D [1]
BP-5	1	PEPCO INCOMING SERVICE		E-28	NOTE C
BP-6	1			E-28	NOTE A
BP-7, 8	1		ELM ST. VENT SHALT	E-31	

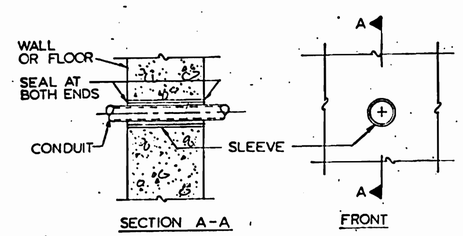

SLEEVE DETAIL (TYP.)
NOT TO SCALE

FUTURE CONDUIT SIZE	SLEEVES: SIZE AS DESIGNATED	NOMINAL I.D. [1]	COMMERCIAL COND SIZE USED
1"	1"	2.315"	2-1/2"
1-1/4"	1-1/4"	2.66"	2-1/2"
1-1/2"	1-1/2"	2.90	3"
2"	2"	3.376	3-1/2"
2-1/2"	2-1/2"	3.875	4"
3"	3"	4.50	5"
3-1/2"	3-1/2"	5.00	5"
4"	4"	5.50	6"

[1] SLEEVE - NOMINAL I.D. = O.D. OF FUTURE CONDUIT + 1".

DESIGNED	P.S. CHU	2-20-75 DATE
DRAWN	B. GOLTER	2-26-75 DATE
CHECKED	H.B. ZACKRISON	6-16-80 DATE
APPROVED	H.B. ZACKRISON	6-16-80 DATE

REFERENCE DRAWINGS

NUMBER	DESCRIPTION

REVISIONS

DATE	BY		DESCRIPTION
7-12-83	HTN	1	REVISED PER PCO-86, AS BUILT

REGISTERED PROFESSIONAL ENGINEER 3889-R STATE OF MARYLAND

WASHINGTON METROPOLITAN AREA TRANSIT AUTHORITY

MATHEWS • CHATELAIN • BEALL
ENGINEERS AND ARCHITECTS
SECTION DESIGNER
SUBMITTED Shirley A. O'Grean DATE 8-15-80

DE LEUW, CATHER & COMPANY
GENERAL ENGINEERING CONSULTANT
HARRY WEESE & ASSOCIATES
GENERAL ARCHITECTURAL CONSULTANT
APPROVED

ROCKVILLE ROUTE
BETHESDA STATION
PULLBOX DETAILS

SCALE 1/2" = 1'-0"

DRAWING NO. FA11-E-47

M334-198

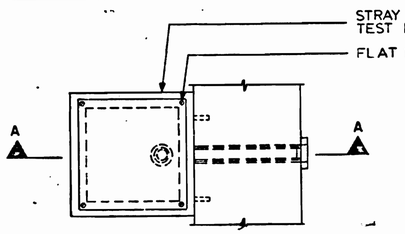

NOTES

A. HANGERS TO BE SPACED AS REQUIRED BY APPLICABLE CODES.

B. OTHERS MAY CONNECT TEST LEADS FROM FOREIGN STRUCTURES DURING CONSTRUCTION.

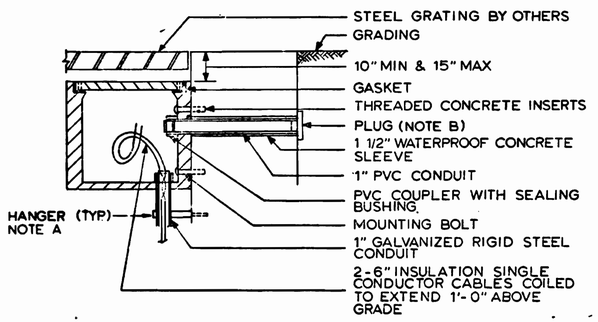

SECTION A-A

(A) STRAY CURRENT TESTBOX

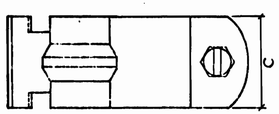

SIDE VIEW

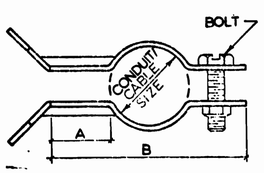

TOP VIEW

CLAMP SCHEDULE				
NOMINAL CONDUIT OR CABLE SIZE	PART NO. (SEE NOTE 1)	DIMENSIONS (INCHES)		
		A	B	C
1/2	P3409	1-1/8	2-1/8	1-1/4x14Ga
3/4	P3411	1-1/4	2-5/16	
1	P3412	1-5/16	2-1/2	
1-1/4	P3413	1-1/2	2-3/4	
1-1/2	P3414	1-11/16	3-1/4	1-1/4x12Ga
1-3/4	P3415	1-3/4	3-1/2	1-1/4x10Ga
2	P3417	2"	4"	1-1/4x10Ga

NOTE: 1 CLAMPS SHALL BE ELECTRO GALVANIZED STEEL. PART NUMBERS ARE SIMILAR TO SERIES p-3409 UNISTRUT CORP EQUAL SUBSTITUTIONS ARE ACCEPTABLE.

(B) CABLE & CONDUIT CLAMP DETAIL

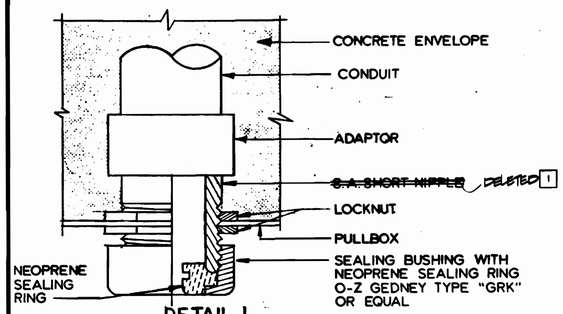

DETAIL 1

TERMINATION OF CONDUIT IN PULLBOX (TOP END)

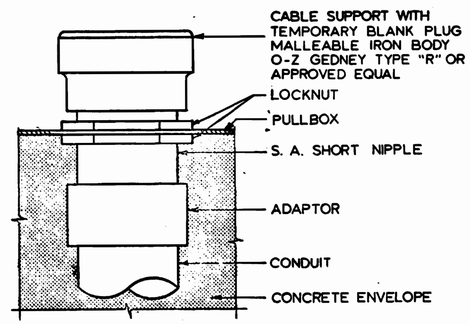

DETAIL 2

TERMINATION OF CONDUIT IN PULL BOX (BOTTOM END)

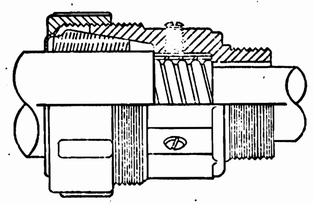

DETAIL 3

CABLE TERMINATION FOR INTERLOCKED ALUMINUM TAPE ARMOR CABLE

(C) CABLE TERMINATION DETAILS

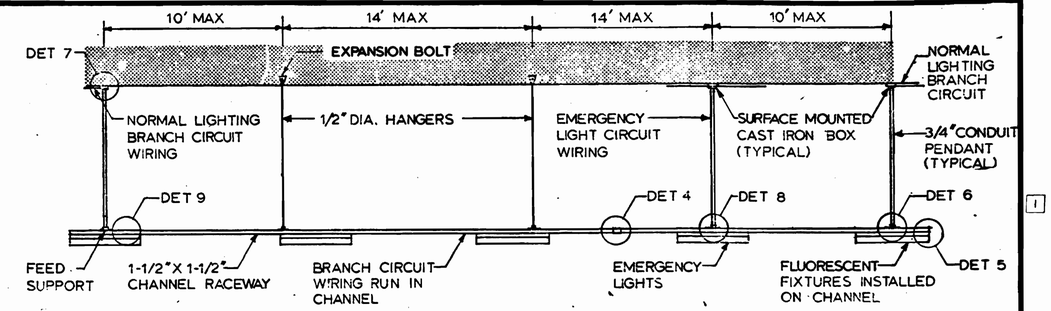

TYPICAL INSTALLATION

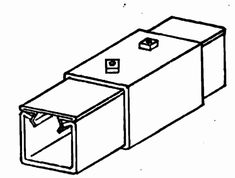

DETAIL 4

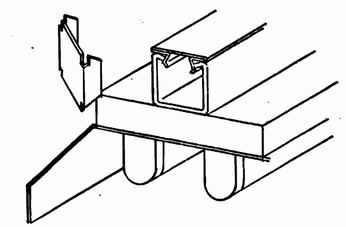

DETAIL 5

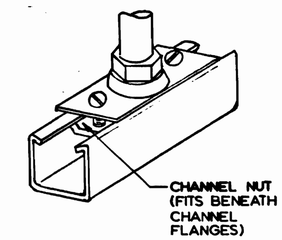

DETAIL 6

(FOR CLARITY, SNAP-ON COVER NOT SHOWN)

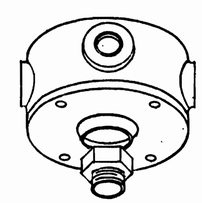

DETAIL 7

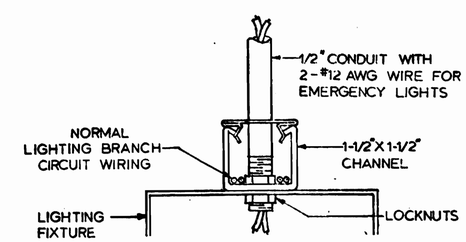

DETAIL 8

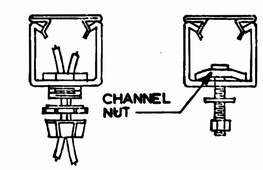

DETAIL 9

(D) TYPICAL FLUORESCENT FIXTURE MOUNTING DETAILS

AS-BUILT CONDITION
SEP 19 1983
REVIEWED ENGINEER DATE

DESIGNED	P.S. CHU	6-1-74 DATE
DRAWN	K. SAMPERTON C.A. GRAAE	5-14-75 DATE
CHECKED	H.B. ZACKRISON	6-16-80 DATE
APPROVED	H.B. ZACKRISON	6-16-80 DATE

REFERENCE DRAWINGS

NUMBER	DESCRIPTION

REVISIONS

DATE	BY	DESCRIPTION
9-25-80	H.Z.	REVISED DETAIL "A" & DETAIL TITLES
7-12-83	HTN	1 PULL BOX DISCREPANCIES NO. V. SHAFT PER PCO-86, AS BUILT

3889-R STATE OF MARYLAND

WASHINGTON METROPOLITAN AREA TRANSIT AUTHORITY

MATHEWS • CHATELAIN • BEALL
ENGINEERS AND ARCHITECTS
SECTION DESIGNER

SUBMITTED DATE 8-15-80

DE LEUW, CATHER & COMPANY
GENERAL ENGINEERING CONSULTANT

HARRY WEESE & ASSOCIATES
GENERAL ARCHITECTURAL CONSULTANT

APPROVED

ROCKVILLE ROUTE
BETHESDA STATION
ELECTRICAL DETAILS

SCALE	DRAWING NO.	
NONE	FA11-E-48	M334-199

TERMINAL BOX (APPROXIMATE DIMENSIONS IN INCHES)						
CABLE RANGE: 3 OR 4/C ARMORED TYPE.	ENCLOSURE			TERMINAL BLOCK		
	A	B	C	D	E	F
#12 THRU #8	8	6	3 1/2	3 19/32	2 1/8	1 11/16
#6 THRU #2	12	10	5	4 1/8	3	2 1/4
#1 THRU #4/0	14	12	6	4 17/32	3	2 1/4
250MCM THRU 500MCM	16	14	6	USE CABLE CONNECTORS AS REQ'D. SEE DETAILS 3 & 4.		

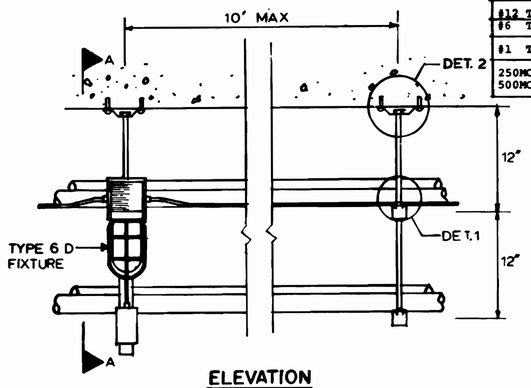

ELEVATION

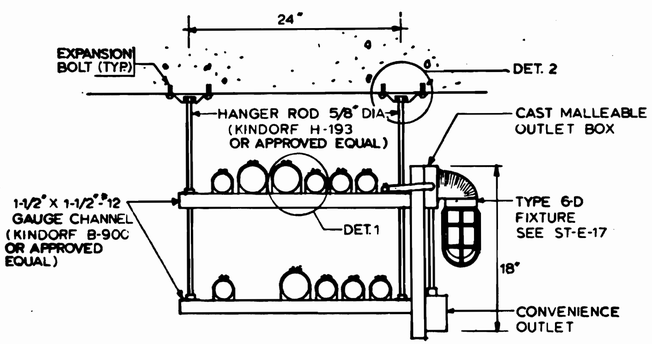

SECTION A-A

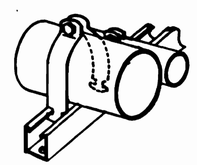

DETAIL 1

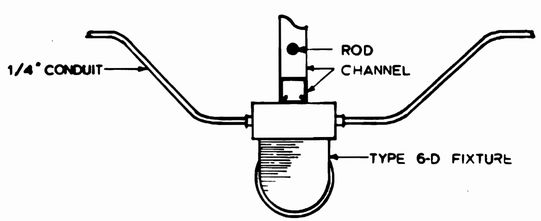

TOP VIEW

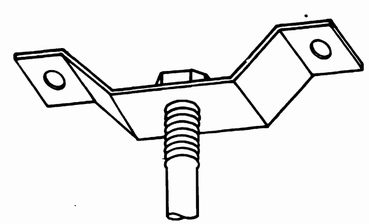

DETAIL 2

(A) TRAPEZE CONDUIT HANGER IN DOME RELIEF SPACE
NOT TO SCALE (E-18,19,20)

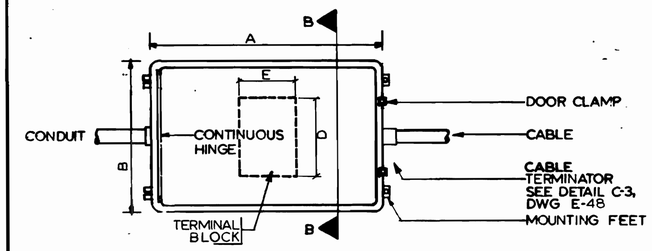

ELEVATION

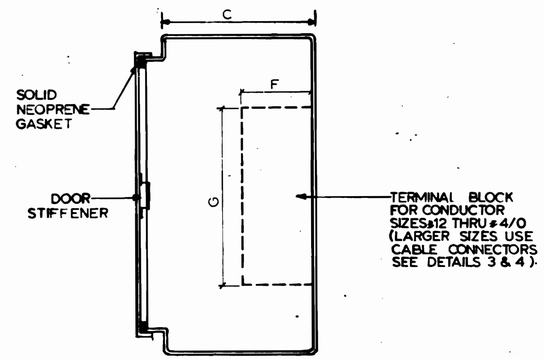

SECTION B-B

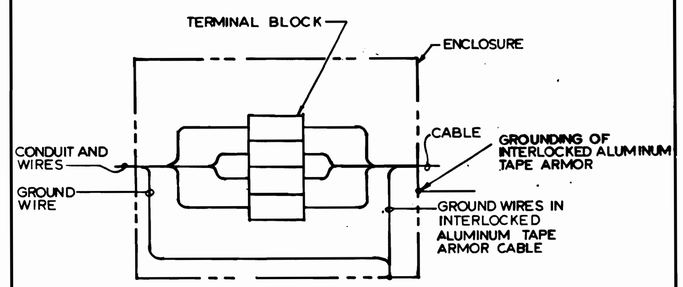

WIRING DIAGRAM-1

(B) TYPICAL TUNNEL TERMINAL BOX
NOT TO SCALE (E-3,20)

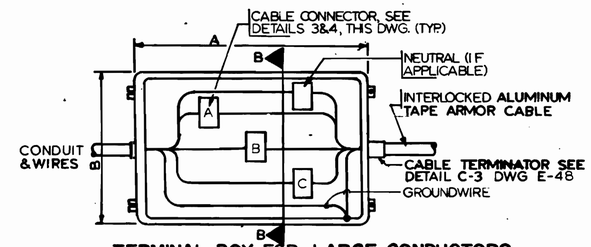

TERMINAL BOX FOR LARGE CONDUCTORS
WIRING DIAGRAM-2

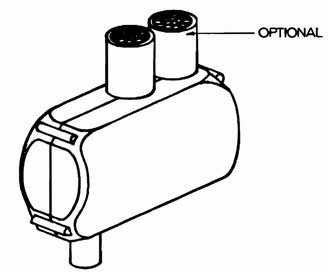

DETAIL 3
(PERSPECTIVE VIEW)

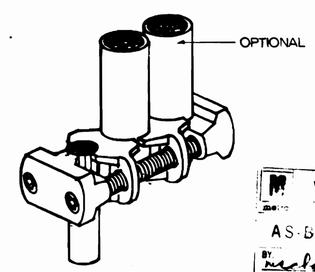

DETAIL 4
(PERSPECTIVE VIEW WITHOUT INSULATED COVER)

(C) CABLE CONNECTORS
NOT TO SCALE

WASHINGTON METROPOLITAN AREA TRANSIT AUTHORITY
AS-BUILT CONDITION
BY RESIDENT ENGINEER DATE SEP 15 1980

DESIGNED	P.S. CHU	10-17-79 DATE
DRAWN	C.A. GRAAE	10-10-79 DATE
CHECKED	H. B. ZACKRISON	6-16-80 DATE
APPROVED	H. B. ZACKRISON	6-16-80 DATE

REFERENCE DRAWINGS	
NUMBER	DESCRIPTION

REVISIONS		
DATE	BY	DESCRIPTION

3889-R STATE OF MARYLAND

WASHINGTON METROPOLITAN AREA TRANSIT AUTHORITY

MATHEWS, • CHATELAIN • BEALL
ENGINEERS AND ARCHITECTS
SECTION DESIGNER
SUBMITTED DATE 8-15-80

DE LEUW, CATHER & COMPANY
GENERAL ENGINEERING CONSULTANT
HARRY WEESE & ASSOCIATES
GENERAL ARCHITECTURAL CONSULTANT
APPROVED

ROCKVILLE ROUTE
MEDICAL CENTER STATION
ELECTRICAL DETAILS

SCALE	DRAWING NO.	
NONE	FAII-E-49	M334-200

CABLE DESIG.	CONDUCTORS NO.	CONDUCTORS SIZE	DWG. NO.	FROM	TO	TYPE SERVICE	SYS. V	ROUTE VIA CONDUIT(S) OR CABLE AREA	REMARKS
FDWV-1	3/C	#2/0 & GND.	E-14	N-A.C SWBD RM. BETHESDA STATION	N-SAFETY WALK - O.B.	FDR #1 WEST VIRGINIA FAN SHAFT	480	B22*	
			E-8,10, E-12,14	N-SAFETY WALK - O.B.	TERMINAL BOX WEST VIRGINIA FAN SHAFT			CABLE AREA	
			E-8	TERMINAL BOX WEST VIRGINIA FAN SHAFT	TRANSFER SWITCH WEST VIRGINIA FAN SHAFT				SEE PARTIAL PLAN DWG. E-37
FDWV-2	3/C	#2/0 & GND.	E-4,6	TERMINAL BOX NEAR STA.440+24.02	TERMINAL BOX WEST VIRGINIA FAN SHAFT	FDR #2 WEST VIRGINIA FAN SHAFT	480	CABLE AREA	SEE PARTIAL PLAN DWG. E-37
	3/C	#2/0 & GND.	E-7,8	TERMINAL BOX WEST VIRGINIA FAN SHAFT	TRANSFER SWITCH WEST VIRGINIA FAN SHAFT				
FMSL-OB	4/C	#8 & GND.	E-3,5,7	LIGHTING FIXTURES STA.440+15 - O.B.	LIGHTING FIXTURES STA.424+55 - O.B.	ESSENTIAL LIGHTING	480	CABLE AREA	
FMSEL-OB	4/C	#8 & GND.	E-3,5,7	LIGHTING FIXTURES STA.439+75 - O.B.	LIGHTING FIXTURES STA.424+35 - O.B.	EMER. LIGHTING	480	CABLE AREA	
FMSP-OB	3/C	#8 & GND.	E-4,6	TERMINAL BOX AT STA.440+12 - O.B	LOAD CENTER STA.428+35 - O.B.	LOAD CENTERS	480	CABLE AREA	
FMSL-IB	4/C	#8 & GND.	E-3,5,7	LIGHTING FIXTURES STA.440+15 - I.B.	LIGHTING FIXTURES STA.424+55 - I.B.	ESSENTIAL LIGHTING	480	CABLE AREA	
FMSEL-IB	4/C	#8 & GND.	E-3,5,7	LIGHTING FIXTURES STA.439+75 - I.B.	LIGHTING FIXTURES STA.424+35 - I.B.	EMER. LIGHTING	480	CABLE AREA	
FMSP-IB	3/C	#8 & GND.	E-4,6	TERMINIAL BOX I.B. TRACK STA.440+20	LOAD CENTER STA.428+35 - I.B.	LOAD CENTERS	480	CABLE AREA	
FBNL-OB	4/C	#8 & GND.	E-14	N-AC SWBD ROOM BETHESDA STATION	N-SAFETY WALK - O.B.	ESSENTIAL LIGHTING	480	B19*	NT8,10,12
			E-7,9,11, E-13,14	N-SAFETY WALK - O.B.	S. OF ADIT WEST VIRGINIA FAN SHAFT			CABLE AREA	
			E-7	S. OF ADIT WEST VIRGINIA FAN SHAFT	N. OF ADIT WEST VIRGINIA FAN SHAFT			119*	
			E-7	N. OF ADIT WEST VIRGINIA FAN SHAFT	LIGHTING FIXTURE AT STA.424+15 - O.B.				
FBNEL-OB	4/C	#8 & GND.	E-11,14	N-AC SWBD ROOM BETHESDA STATION	N-SAFETY WALK - O.B.	EMER. LIGHTING	480	B18*	NEH7,9,11
			E-7,9,11, E-13,14	N-SAFETY WALK - O.B.	S-ADIT WEST VIRGINIA FAN SHAFT - O.B.			CABLE AREA	
			E-7	S-ADIT WEST VIRGINIA FAN SHAFT - O.B.	N-ADIT WEST VIRGINIA FAN SHAFT - O.B.			118*	
				N OF ADIT WEST VIRGINIA FAN SHAFT	LIGHTING FIXTURE AT STA 423 + 75.00 - O.B.			CABLE AREA	
FBND	4/C	#1/0& GND	E-14,19	S.-A.C. SWBD.RM. BETHESDA STATION	TERM. BOX S.-OF ELM STREET VENT SHAFT ADIT-O.B.	FEEDER FOR NORWOOD FAN SHAFT	480	B-35*	ESS. BUS

CABLE DESIG.	CONDUCTORS NO.	CONDUCTORS SIZE	DWG. NO.	FROM	TO	TYPE SERVICE	SYS. V	ROUTE VIA CONDUIT(S) OR CABLE AREA	REMARKS
FBNP-O.B.	3/C	#8 & GND.	E-14	N.-A.C. SWBD. ROOM BETHESDA STATION	N.- SAFETY WALK - O.B.	LOAD CENTERS	480	B-20	
			E-8,10,12 14		S. OF ADIT WEST VIRGINIA FAN SHAFT			CABLE AREA	
			E-7,8	S. OF ADIT WEST VIRGINIA FAN SHAFT	N. OF ADIT WEST VIRGINIA FAN SHAFT			120*	
			E-8	S. OF ADIT WEST VIRGINIA FAN SHAFT	LOAD CENTER AT STATION 421 + 95-O.B.			CABLE AREA	
FBNL-IB	4/C	#8 &GND	E-14	N.-A.C. SWBD. ROOM BETHESDA STATION	N.- SAFETY WALK- I.B.	ESSENTIAL LIGHTING	480	B-28*	NT-7,9,11
			E-7,9,11 13	N. SAFETY WALK - I.B.	S. OF ADIT WEST VIRGINIA FAN SHAFT - 1B			CABLE AREA	
			E -7	S. OF ADIT WEST VIRGINIA FAN SHAFT - 1B	N. OF ADIT WEST VIRGINIA FAN SHAFT SAFETY WALK			122*	
			E-7	N. OF ADIT WEST VIRGINIA FAN SHAFT SAFETY WALK- I.B.	LIGHTING FIXTURE STATION 424 + 15 - 1B			CABLE AREA	
FBNEL-IB	4/C	#8 &GND	E-14	N.-A.C. SWBD. ROOM BETHESDA STATION	N.-SAFETY WALK- I.B.	EMERGENCY LIGHTING	480	B-27*	NEH-6,8,10
			E-7,9,11, 13	N.-SAFETY WALK- I.B. SHAFT SAFETY WALK	S. OF ADIT WEST VIRGINIA FAN SHAFT SAFETY WALK -IB.			CABLE AREA	
			E-7	S. OF ADIT WEST VIRGINIA FAN SHAFT SAFETY WALK- I.B.	N. OF ADIT WEST VIRGINIA FAN SHAFT SAFETY WALK			121	
			E-7	N. OF ADIT WEST VIRGINIA FAN SHAFT SAFETY WALK	LIGHTING FIXTURE STATION 423 + 75 - I.B.			CABLE AREA	
FBNP-IB	3/C	#8 &GND	E-14	N.- A.C. SWBD. ROOM BETHESDA STATION	N.-SAFETY WALK- I.B.	LOAD CENTERS	480	B-29*	
			E-8,12,14 16	N.- SAFETY WALK- I.B.	S. OF ADIT WEST VIRGINIA FAN SHAFT SAFETY WALK- I.B.			CABLE AREA	
			E-7,8	S. OF ADIT WEST VIRGINIA FAN SHAFT SAFETY WALK- I.B.	N. OF ADIT WEST VIRGINIA SHAFT SAFETY WALK			123*	
			E-8	N. OF ADIT WEST VIRGINIA FAN SHAFT SAFETY WALK	LOAD CENTER AT STATION 421 + 95 - I.B.			CABLE AREA	
FBSL-1B	4/C	#8 &GND	E-13,19	S.-A.C. SWBD. ROOM BETHESDA STATION	TERM. BOX AT S.- ELM STREET VENT SHAFT ADIT - I.B.	ESSENTIAL LIGHTING	480	B-40*	ST/7,9,11
FBSEL-1B	4/C	#8 &GND	E-13,19	S.- A.C. SWBD. ROOM BETHESDA STATION	TERM. BOX AT S.- ELM STREET VENT SHAFT ADIT - I.B.	EMERGENCY LIGHTING	480	B-39*	SEH/5,7,9
FBSP-1B	3/C	#1/0 &GND	E-14,19	S.- A.C. SWBD. ROOM BETHESDA STATION	TERM. BOX AT S.- ELM STREET VENT SHAFT ADIT - I.B.	LOAD CENTERS	480	B-41*	SPON/2
FBSL-OB	4/C	#8 &GND	E-13,19	S.- A.C. SWBD. ROOM BETHESDA STATION	TERM. BOX AT S.- ELM STREET VENT SHAFT ADIT- O.B.	ESSENTIAL LIGHTING	480	B-33*	ST/8,10,12
FBSEL-OB	4/C	#8 &GND	E-13,19	S.- A.C. SWBD. ROOM BETHESDA STATION	TERM. BOX AT S.- ELM STREET VENT SHAFT ADIT- O.B.	EMERGENCY LIGHTING	480	B-32*	SEH/8,10,12
FBSP-OB	3/C	#1/0 &GND	E-14,19	S.-A.C. SWBD. ROOM BETHESDA STATION	TERM. BOX AT S.- ELM STREET VENT SHAFT ADIT- O.B.	LOAD CENTERS	480	B-34*	SPON/1

WASHINGTON METROPOLITAN AREA TRANSIT AUTHORITY
AS BUILT
SEP 10 1983

DESIGNED P.S. CHU	8-25-78 DATE	
DRAWN G. GRAYTON	2-20-79 DATE	
CHECKED H. ZACKRISON	8-18-80 DATE	
APPROVED H. ZACKRISON	8-18-80 DATE	

REFERENCE DRAWINGS

NUMBER	DESCRIPTION

REVISIONS

DATE	BY	DESCRIPTION
9-25-80	H.Z.	CORRECTED FEEDER DESIGNATIONS

3889-R

WASHINGTON METROPOLITAN AREA TRANSIT AUTHORITY

MATHEWS • CHATELAIN • BEALL
ENGINEERS AND ARCHITECTS
SECTION DESIGNER
SUBMITTED DATE 8-15-80

DE LEUW, CATHER & COMPANY
GENERAL ENGINEERING CONSULTANT

HARRY WEESE & ASSOCIATES
GENERAL ARCHITECTURAL CONSULTANT
APPROVED

ROCKVILLE ROUTE
BETHESDA STATION
CABLE SCHEDULE

SCALE NONE

DRAWING NO. FAII-E-50

M334-201

CONDUIT DESIG.	CONDUIT SIZE	CONDUIT TYPE	DWG. NO.	FROM	TO	FUNCTION	VOLTAGE	CONDUCTORS NO.	CONDUCTORS SIZE	REMARKS
				WEST VIRGINIA FAN SHAFT						
12	2"	GSR	E-7	SOUTH SAFETY WALK OF FAN SHAFT ADIT - O.B.	NORTH SAFETY WALK OF FAN SHAFT ADIT - O.B.	EMER. LTG. FDR	480V	4	#8	FBNEL-OB
13						ESSENTIAL FDR	480V	4	#8	FBNL-OB
14						NON-ESSENTIAL FDR	480V	3	#6	FBNP-OB
44	3"					FUTURE AC POWER CABLES				
45	2"									
15	2"									
COM4	2"									
COM10	4"					FUTURE COMMUNICATION CABLES				
COM5	4"									
COM6	4"									
TC20 THRU TC25	4"					FUTURE TRAIN CONTROL CABLES				
36	2"	GSR	E-7	SOUTH SAFETY WALK OF FAN SHAFT ADIT - I.B.	NORTH SAFETY WALK OF FAN SHAFT ADIT - I.B.	EMER. LTG. FDR	480V	4	#8	FBNEL-IB
37	2"					ESSENTIAL FDR	480V	4	#8	FBNL-IB
38	2"					NON-ESSENTIAL FDR	480V	3	#6	FBNP-IB
39	2"					FUTURE AC POWER CABLES				
41	3"									
42	3"									
43	3"									
40	3"									
COM14	2"									
COM15	2"									
COM20	2"									
COM21	2"									
COM22 THRU COM24	4"					FUTURE COMMUNICATION CABLES				
TC10 THRU TC12	4"					FUTURE TRAIN CONTROL CABLES				
TC16 THRU TC18	4"									

CONDUIT DESIG.	CONDUIT SIZE	CONDUIT TYPE	DWG. NO.	FROM	TO	FUNCTION	VOLTAGE	CONDUCTORS NO.	CONDUCTORS SIZE	REMARKS
M217s*	1"	PVC	E-36	WEST VIRGINIA FAN SHAFT UPPER STRUCTURE	STREET LEVEL	STRAY CURRENT				
M217	1"	GSR	E-36	WEST VIRGINIA FAN SHAFT	STREET LEVEL	STRAY CURRENT		2	#6	CONT'D OF M217s*

* DENOTES EXISTING CONDUIT OR SLEEVE (TYPICAL)

● EXTEND CONDUIT STUBOUT AS REQ. TO CONN. TO PNL. OR SWBD

DESIGNED	R S. CHU	8-22-79 DATE
DRAWN	G. GRAYTON	2-20-79 DATE
CHECKED	H. B. ZACKRISON	8-15-80 DATE
APPROVED	H. B. ZACKRISON	8-15-80 DATE

REFERENCE DRAWINGS	
NUMBER	DESCRIPTION

REVISIONS		
DATE	BY	DESCRIPTION

3889-R STATE OF MARYLAND

WASHINGTON METROPOLITAN AREA TRANSIT AUTHORITY

MATHEWS • CHATELAIN • BEALL
ENGINEERS AND ARCHITECTS
SECTION DESIGNER

SUBMITTED _____ DATE 8-15-80

DE LEUW, CATHER & COMPANY
GENERAL ENGINEERING CONSULTANT ■

HARRY WEESE & ASSOCIATES
GENERAL ARCHITECTURAL CONSULTANT □

APPROVED _____

ROCKVILLE ROUTE
BETHESDA STATION
TUNNEL CONDUIT SCHEDULE

SCALE	DRAWING NO.	
NONE	FAII-E-51	M334-202

CONDUIT DESIG.	CONDUIT SIZE	CONDUIT TYPE	DWG. NO.	FROM	TO	FUNCTION	VOLTAGE	CONDUCTORS NO.	CONDUCTORS SIZE	REMARKS
BTC1* THRU BTC9a*	4"	GSR	E-23,126	TRAIN CONTROL ROOM	SOUTH R.A. PLENUM	TRAIN CONTROL				
BTC13*										
BTC15* THRU BTC16*										
BTC1a*		PVC	E-14,126	NORTH R.A. PLENUM	NORTH TUNNEL SAFETY WALK -I.B.					
BTC2a*					NORTH TUNNEL SAFETY WALK - O.B.					
BTC3a*										
BTC4a* THRU BTC6a*					NORTH TUNNEL SAFETY WALK - I.B.					
BTC7a* THRU BTC9a*					NORTH TUNNEL SAFETY WALK - O.B.					
BTC13a*					NORTH TUNNEL SAFETY WALK - I.B.					
BTC15a*										
BTC16a*					NORTH TUNNEL SAFETY WALK - O.B.					
BTC20* THUR BTC25*	4"	PVC	E-19,23	TRAIN CONTROL ROOM	SOUTH TUNNEL SAFETY WALK - O.B.	TRAIN CONTROL				
BTC26* THRU BTC31*	4"	PVC	E-19,23	TRAIN CONTROL ROOM	SOUTH TUNNEL SAFETY WALK - I.B.	TRAIN CONTROL				
BTC32*	4"	GSR	E-23,126	TRAIN CONTROL ROOM	SOUTH R.A. PLENUM	LOCAL TRAIN CONTROL				
BTC33*			E-23,126							
BTC32a*	2"		E-20	SOUTH R.A. PLENUM	UNDER PLATFORM EDGE - O.B.					
BTC32b*			E-19	MID R.A. PLENUM						
BTC32c*			E-18	NORTH R.A. PLENUM						
BTC33a*			E-20	SOUTH R.A. PLENUM	UNDER PLATFORM EDGE - I.B.					
BTC33b*			E-19	MID R.A. PLENUM						
BTC33c*			E-18	NORTH R.A. PLENUM						
BTC34	2"	GSR	E-17,23 127	TRAIN CONTROL ROOM	SOUTH ACSWBD RM.	D.T.S.				VIA BTC34a*
BTC35										VIA BTC35a*

CONDUIT DESIG.	CONDUIT SIZE	CONDUIT TYPE	DWG. NO.	FROM	TO	FUNCTION	VOLTAGE	CONDUCTORS NO.	CONDUCTORS SIZE	REMARKS
BTC34a*	2"	GSR	E-23	TRAIN CONTROL ROOM	SOUTH AC SWBD RM.	D.T.S.				SLEEVE
BTC35a*			E-23		SOUTH AC SWBD RM.					SLEEVE
BTC36*			E-23 E-126		SOUTH R.A. PLENUM					
BTC37*			E-23 E-126		SOUTH R.A. PLENUM					
BTC36a*			E-17 E-126	NORTH R.A. PLENUM	NORTH AC SWBD RM.					
BTC37a*				NORTH R.A. PLENUM	NORTH AC SWBD RM.					
BTC38	4"			NORTH AC SWBD RM.	NORTH R.A. PLENUM	PROGRAM STOP CABLE				
BTC40*	2"		E-18	NORTH R.A. PLENUM	UNDER NORTH PLATFORM O.B. EDGE	IMPEDANCE BOND				
BTC41*			E-18	NORTH R.A. PLENUM	UNDER NORTH PLATFORM I.B. EDGE					
BTC42*			E-19	MID R.A. PLENUM	UNDER MID PLATFORM O.B. EDGE					
BTC43*			E-19	MID R.A. PLENUM	UNDER MID PLATFORM I.B. EDGE					
BTC44*			E-20	SOUTH R.A. PLENUM	UNDER SOUTH PLATFORM O.B. EDGE					
BTC45*			E-20	SOUTH R.A. PLENUM	UNDER SOUTH PLATFORM I.B. EDGE					

* DENOTES EXISTING CONDUIT OR SLEEVE (TYPICAL)

● EXTEND CONDUIT STUBOUT AS REQ. TO CONN. TO PNL. OR SWBD

AS BUILT CONDITION

DESIGNED	P.S. GHU	8-25-79 DATE
DRAWN	G. GRAYTON	8-20-79 DATE
CHECKED	H. ZACKRISON	8-16-80 DATE
APPROVED	H. ZACKRISON	8-16-80 DATE

REFERENCE DRAWINGS

NUMBER	DESCRIPTION

REVISIONS

DATE	BY	DESCRIPTION
9-25-80	H.Z.	REVISED CONDUIT FUNCTION

REGISTERED PROFESSIONAL ENGINEER 3889-R STATE OF MARYLAND

WASHINGTON METROPOLITAN AREA TRANSIT AUTHORITY

MATHEWS • CHATELAIN • BEALL
ENGINEERS AND ARCHITECTS
SECTION DESIGNER

SUBMITTED Jerry R. Press DATE 8-15-80

DE LEUW, CATHER & COMPANY
GENERAL ENGINEERING CONSULTANT

HARRY WEESE & ASSOCIATES
GENERAL ARCHITECTURAL CONSULTANT

APPROVED Paul H. Wooden

ROCKVILLE ROUTE
BETHESDA STATION
TRAIN CONTROL POWER CONDUIT SCHEDULE

SCALE	DRAWING NO.	
NONE	FAII-E-52	M334-203

CONDUIT DESIG.	CONDUIT SIZE	CONDUIT TYPE	DWG. NO.	FROM	TO	FUNCTION	VOLTAGE	CONDUCTORS NO.	CONDUCTORS SIZE	REMARKS
DP1* THRU DP7*	3"	PVC	E-32	STUB UP AT NORTH O.B. CONTACT RAIL STA.397+34.5	STUB UP AT NORTH VENT SHAFT ADIT	FUTURE POSITIVE TRACTION POWER CABLE				
DP1b THRU DP7b				STUB UP AT NORTH VENT SHAFT ADIT	NORTH VENT SHAFT HIGH LEVEL					DUCTBANK
DP1a* THRU DP7a*				NORTH VENT SHAFT	BETHESDA T.P.S.S.					
DP8 THRU DP14				STUB UP AT NORTH I.B. CONTACT RAIL STA.396+54.5	STUB UP AT NORTH VENT SHAFT ADIT					
DP8b THRU DP14b				STUB UP AT NORTH VENT SHAFT ADIT	NORTH VENT SHAFT HIGH LEVEL					DUCTBANK
DP8a* THRU DP14a*				NORTH VENT SHAFT HIGH LEVEL	BETHESDA T.P.S.S.					
DP15 THRU DP21				STUB UP AT SOUTH I.B. CONTACT RAIL STA.385+65.5	STUB UP AT NORTH VENT SHAFT ADIT					
DP15b THRU DP21b				STUB UP AT NORTH VENT SHAFT ADIT	NORTH VENT SHAFT HIGH LEVEL					DUCTBANK
DP15a* THRU DP21a*				NORTH VENT SHAFT HIGH LEVEL	BETHESDA T.P.S.S.					
DP22 THRU DP28				STUB UP AT SOUTH O.B. CONTACT RAIL STA.395+65.5	STUB UP AT NORTH VENT SHAFT ADIT					
DP22b THRU DP28b				STUB UP AT NORTH VENT SHAFT ADIT	NORTH VENT SHAFT HIGH LEVEL					DUCTBANK
DP22a* THRU DP28a*				NORTH VENT SHAFT HIGH LEVEL	BETHESDA T.P.S.S.					
DP29 THRU DP33				STUB UP AT NORTH O.B. CONTACT RAIL STA.396+265	STUB UP AT NORTH VENT SHAFT ADIT					
DP29b THRU DP33b				STUB UP AT NORTH VENT SHAFT ADIT	NORTH VENT SHAFT HIGH LEVEL					DUCTBANK
DP29a* THRU DP33a*				NORTH VENT SHAFT HIGH LEVEL	BETHESDA T.P.S.S.					
DN1 THRU DN12	3"	PVC	E-32	STUB UP AT NORTH O.B. TRACK STA.369+23.0	STUB UP AT NORTH VENT SHAFT ADIT	FUTURE NEGATIVE TRACTION POWER CABLE				
DN1b THRU DN12b				STUB UP AT NORTH VENT SHAFT ADIT	NORTH VENT SHAFT HIGH LEVEL LEVEL					DUCTBANK
DN1a* THRU DN12a*				NORTH VENT SHAFT HIGH LEVEL	BETHESDA T.P.S.S.					
DN13 THRU DN24				STUB UP AT NORTH I.B. TRACK STA.369+23.0	STUB UP AT NORTH VENT SHAFT ADIT					
DN13b THRU DN24b				STUB UP AT NORTH VENT SHAFT ADIT	NORTH VENT SHAFT HIGH LEVEL					DUCTBANK
DN13a* THRU DN24a*				NORTH VENT SHAFT HIGH LEVEL	BETHESDA T.P.S.S.					

CONDUIT DESIG.	CONDUIT SIZE	CONDUIT TYPE	DWG. NO.	FROM	TO	FUNCTION	VOLTAGE	CONDUCTORS NO.	CONDUCTORS SIZE	REMARKS

* DENOTES EXISTING CONDUIT OR SLEEVE (TYPICAL)

● EXTEND CONDUIT STUBOUT AS REQ. TO CONN. TO PNL. OR SWBD

AS BUILT

DESIGNED	P. S. CHU	6-25-79 DATE
DRAWN	G. GRAYTON	2-20-79 DATE
CHECKED	H. ZACKRISON	6-16-80 DATE
APPROVED	H. ZACKRISON	6-16-80 DATE

REFERENCE DRAWINGS	
NUMBER	DESCRIPTION

REVISIONS		
DATE	BY	DESCRIPTION

CERTIFIED ABU REGISTRATION OF MARYLAND 3889-R STATE OF MARYLAND

WASHINGTON METROPOLITAN AREA TRANSIT AUTHORITY

MATHEWS • CHATELAIN • BEALL
ENGINEERS AND ARCHITECTS
SECTION DESIGNER

SUBMITTED _____ DATE 8-15-80

DE LEUW, CATHER & COMPANY
GENERAL ENGINEERING CONSULTANT

HARRY WEESE & ASSOCIATES
GENERAL ARCHITECTURAL CONSULTANT

APPROVED _____

ROCKVILLE ROUTE
BETHESDA STATION
TRACTION POWER CONDUIT SCHEDULE

SCALE	DRAWING NO.	
NONE	FAII-E-152	M334-204

CONDUIT DESIG.	CONDUIT SIZE	CONDUIT TYPE	DWG. NO.	FROM	TO	FUNCTION	VOLTAGE	CONDUCTORS NO.	CONDUCTORS SIZE	REMARKS
BCOM1* THRU BCOM3*	4"	PVC	E-23 E-126	COMMUNICATION ROOM	SOUTH R.A. PLENUM	FUTURE COMMUNICATION				
BCOM1a* THRU BCOM3a*		GSR	E-14 E-126	NORTH R.A. PLENUM	NORTH SAFETY WALK IN TUNNEL - I.B.					
BCOM4* THRU BCOM6*		PVC	E-19 E-23	COMMUNICATION ROOM	SOUTH SAFETY WALK IN TUNNEL - I.B.					CONT'D OF BCOM1* THRU BCOM3*
BCOM7* THRU BCOM9*		PVC	E-23 E-126	COMMUNICATION ROOM	SOUTH R.A. PLENUM					
BCOM7a* THRU BCOM9a*		GSR	E-14 E-126	NORTH R.A. PLENUM	NORTH SAFETY WALK IN TUNNEL - O.B.					CONT'D OF BCOM7* THRU BCOM9*
BCOM10* THRU BCOM12*		PVC	E-13, 19 E-23	COMMUNICATION ROOM	SOUTH SAFETY WALK IN TUNNEL - O.B.					
BCOM40a THRU BCOM42a	4"	GSR	E-24 E-30	COMMUNICATION ROOM	HIGH LEVEL OF ELM STREET VENT SHAFT	FUTURE INTERFACE				VIA BCOM40s* THRU BCOM42s*
BCOM40s* THRU BCOM42s*			E-30 E-24	OPERATIONS ROOM	ADIT					SLEEVES
BCOM40b* THRU BCOM42b*			E-30	HIGH LEVEL OF ELM STREET VENT SHAFT	STREET LEVEL					CONT'D OF BCOM40a THRU BCOM42a
BCOM43b*	1"		E-17, 23	COMMUNICATION ROOM	EMER. TRIP STA.#4	EMER. TELEPHONE				
BCOM44b*			E-17,23		EMER. TRIP STA.#3					
BCOM45b*			E-23,126		SOUTH R.A. PLENUM					
BCOM46b*			E-23,126							
BCOM45a*			E-17,126	NORTH R.A. PLENUM	EMER. TRIP STA. #2					CONT'D OF BCOM45b*
BCOM46a*			E-17,126		EMER. TRIP STA. #1					CONT'D OF BCOM46b*
BCOM47s*	1½"	GSR	E-23	COMMUNICATION ROOM	DOME SPACE	CCTV #1				SLEEVE
BCOM47a			E-126		DOME SPACE AT STA.395+07.0					VIA BCOM47s*
BCOM47ac*			E-17	DOME SPACE AT STA.355+07.00	CCTV TERMINATION AT NORTH END WALL					
BCOM947s*			E-17,23	COMMUNICATION ROOM	DOME SPACE	CCTV #2				SLEEVE
BCOM947a			E-126		DOME SPACE AT STA.395+07.0					VIA BCOM947s*
BCOM 947ac*			E-17	DOME SPACE AT STA.395+07.00	CCTV TERMINATION AT NORTH END WALL					

CONDUIT DESIG.	CONDUIT SIZE	CONDUIT TYPE	DWG. NO.	FROM	TO	FUNCTION	VOLTAGE	CONDUCTORS NO.	CONDUCTORS SIZE	REMARKS
BCOM48s*	1½"	GSR	E-12,23 E-126	COMMUNICATION ROOM	DOME SPACE	CCTV # 3				SLEEVE
BCOM48a			E-12,126	COMMUNICATION ROOM	DOME SPACE AT STA.392+07.00					VIA BCOM48s*
BCOM48ac*			E-12	DOME SPACE AT STA.392+07.0	CCTV TERMINATION UNDER DOME					
BCOM49*			E-23,126	COMMUNICATION ROOM	SOUTH R.A. PLENUM	CCTV # 7				
BCOM49a			E-18,19 E-22	R.A. PLENUM	CCTV TERMINATION UNDER MEZZ.					CONT'D OF BCOM49* VIA WIRE TROUGH IN COLUMN
BCOM50s*			E-12,23	COMMUNICATION ROOM	DOME SPACE	CCTV # 4				SLEEVE
BCOM50a			E-12,126	COMMUNICATION ROOM	DOME SPACE AT STA.390+57.0					VIA BCOM50s*
BCOM50b			E-12	DOME SPACE AT STA.390+57.0	CCTV TERMINATION UNDER DOME					
BCOM52*	1½"	GSR	E-17,23	COMMUNICATION ROOM	CCTV TERMINATION AT SOUTH END WALL - PLATFORM	FUTURE CCTV # 6				
BCOM53*			E-17,23			FUTURE CCTV # 5				
BCOM54cs*	3"		E-23		DOME SPACE	FUTURE CCTV # 8 & # 9				SLEEVE
BCOM54acs*	4"		E-25	DOME SPACE AT JUNCTION OF STATION & PASSAGEWAY	JUNCTION BOX IN PASSAGEWAY					SLEEVE THRU COLLAR FOR 2 CCTV'S
BCOM54b	3"		E-25,126	COMMUNICATION ROOM	JUNCTION BOX IN PASSAGEWAY					VIA BCOM54cs* AND BCOM54acs*
BCOM54e	1½"		E-25	JUNCTION BOX IN PASSAGEWAY	CCTV TERMINATION AT PASSAGEWAY	FUTURE CCTV #8				
BCOM54d			E-25			FUTURE CCTV # 9				
BCOM55c* THRU BCOM58c*	4"	GSR	E-23,126	COMMUNICATION ROOM	SOUTH R.A. PLENUM	MISC. COMMUNICATION				
BCOM55a THRU BCOM58a			E-22,18	NORTH R.A. PLENUM	KIOSK	MISC. COMMUNICATION				CONT'D OF BCOM55c* THRU BCOM58c* VIA WIRE TROUGH IN CONNECTION
BCOM59s*	1"	GSR	E-23	COMMUNICATION ROOM	DOME SPACE	P.A. SYSTEM O.B.				SLEEVE
BCOM59			E-12,126		P.A. SYSTEM SPEAKERS O.B.	P.A. SYSTEM O.B.				VIA BCOM59s*
BCOM60s*			E-23		DOME SPACE	P.A. SYSTEM I.B.				SLEEVE
BCOM60			E-12,126		P.A. SYSTEM SPEAKERS I.B.	P.A. SYSTEM I.B.				VIA BCOM60s*
BCOM61s*			E-23,126		DOME SPACE	P.A. SYSTEM PASSAGEWAY				SLEEVE
BCOM61			E-25,126		P.A. SYSTEM SPEAKERS PASSAGEWAY					VIA BCOM61s* AND BCOM61acs*
BCOM61acs*			E-25	DOME SPACE AT JUNCTION OF STATION AND PASSAGEWAY	P.A. SYSTEM SPEAKERS PASSAGEWAY					SLEEVE
BCOM62a*	1"	GSR	E-23,126	COMMUNICATION ROOM	SOUTH R.A. PLENUM	P.A. SYSTEM - UNDER MEZZANINE				
BCOM62b			E-~~10,18~~ E-~~22~~,2[1]	NORTH R.A. PLENUM	P.A. SYSTEM SPEAKERS - UNDER MEZZANINE					CONT'D OF BCOM62a* VIA WIRE TROUGH IN COLOMN [1]

* DENOTES EXISTING CONDUIT OR SLEEVE (TYPICAL)

● EXTEND CONDUIT STUBOUT AS REQ. TO CONN. TO PNL. AS SWBD

WASHINGTON METROPOLITAN AREA TRANSIT AUTHORITY
AS-BUILT CONDITION
SEP 19 1983
STATE OF MARYLAND

DESIGNED	P.S. CHU	8-25-78 DATE
DRAWN	G. GRAYTON	2-20-79 DATE
CHECKED	H. B. ZACKRISON	6-16-80 DATE
APPROVED	H. B. ZACKRISON	6-16-80 DATE

REFERENCE DRAWINGS

NUMBER	DESCRIPTION

REVISIONS

DATE	BY	DESCRIPTION
7-12-1983	HTN	[1] REVISED PER PC 0-48, AS BUILT

REGISTERED PROFESSIONAL ENGINEER 3889-R STATE OF MARYLAND

WASHINGTON METROPOLITAN AREA TRANSIT AUTHORITY

MATHEWS • CHATELAIN • BEALL
ENGINEERS AND ARCHITECTS
SECTION DESIGNER

SUBMITTED Jerilyn R. O'Gress DATE 8-15-80

DE LEUW, CATHER & COMPANY
GENERAL ENGINEERING CONSULTANT

HARRY WEESE & ASSOCIATES
GENERAL ARCHITECTURAL CONSULTANT

APPROVED

ROCKVILLE ROUTE
BETHESDA STATION
COMMUNICATION CONDUIT SCHEDULE

SCALE	DRAWING NO.	
NONE	FAII-E-53	M334-205

CONDUIT DESIG.	SIZE	TYPE	DWG. NO.	FROM	TO	FUNCTION	VOLTAGE	CONDUCTORS NO.	CONDUCTORS SIZE	REMARKS
BCOM63s	1"	GSR	E-10	COMMUNICATION ROOM	TRAIN CONTROL ROOM	FIRE DETECTOR IN SOUTH ANCIL. ROOMS				SLEEVE
BCOM63as				SOUTH MECHANICAL ROOM MEZZ.						
BCOM63bs				CORRIDOR - MEZZ.						
BCOM63bc*				COMMUNICATION ROOM	SOUTH AC SWBD RM.					
BCOM63cs				COMMUNICATION ROOM	OPERATIONS ROOM					SLEEVE
BCOM63ds				SOUTH AC SWBD RM	SOUTH BATTERY ROOM					
BCOM63es				EJECTOR ROOM	SOUTH BATTERY ROOM					
BCOM63fs				EJECTOR ROOM	CART STORAGE ROOM					
BCOM63gc*				SOUTH F.E. CAB.-PLATF						
BCOM64*			E-10,23 E126	COMMUNICATION ROOM	SOUTH R.A. PLENUM	FIRE DETECTOR IN NORTH ANCIL. ROOMS				
BCOM64a*			E-10,126	NOPTH R.A. PLENUM	NORTH F.E. CABINET-PLATF.					
BCOM64bc*			E-10	NORTH F.E. CABINET-PLATF.	NORTH BATTERY ROOM					
BCOM64cs				NORTH AC SWBD ROOM						SLEEVE
BCOM64ac*					NORTH MECHANICAL ROOM - MEZZ.					
BCOM64fs				MAINTENANCE ROOM						SLEEVE
BCOM64gs				PLATFORM ELEVATOR MACHINE ROOM						
BCOM64hb			E-22	WIRE TROUGH IN HUNG CEILING - MEZZ.	MEZZ. - INTERFACE	FIRE DETECTOR IN PASSAGEWAY				VIA BCOM72 IN COLUMN
BCOM64hc			E-10,126	F.E. CABINET - PASS.						
BCOM64ks*			E-10	NORTH AC SWBD RM.	SAFETY WALK IN STATION - I.B.	FIRE DETECTOR IN T.P.S.S				SLEEVE
BCOM64ks			E-22,28	SAFFTY WALK IN STATION I.B.	HIGH LEVEL NORTH VENT SHAFT					
BCOM64ks*			E-32	BETHESDA T.P.S.S.						
BCOM64lc			E-10,127	F.E. CABINET - PASS.	MECHANICAL ROOM - ATTIC	FIRE DETECTOR IN PASSAGEWAY				
BCOM64ms			E-10	CORRIDOR - PASS.	BELL SYSTEM ROOM					SLEEVE
BCOM64ns			E-10		WOMEN'S WASH ROOM					
BCOM64ps					MEN'S WASH ROOM					
BCOM64qs					CLEANER'S ROOM					
BCOM64ts				F.E. CABINET - PASS	CORRIDOR - PASS.					
BCOM65c*	2"	GSR	E-23,126	COMMUNICATION ROOM	SOUTH R.A. PLENUM	FIRE DETECTOR				
BCOM65b			E-22,18	WIRE TROUGH IN HUNG CEILING - MEZZ.	MEZZ. - INTERFACE					CONT'D OF BCOM65c* AND VIA BCOM72 IN COLUMN
BCOM65ac*			E-26,126	MEZZ. - INTERFACE	J.B. IN ENT. ESCAL. MACH. ROOM					
BCOM66c*			E-126,23	COMMUNICATION ROOM	SOUTH R.A. PLENUM	EMERGENCY CALL STATION 1				
BCOM66	1"		E-22	WIRE TROUGH IN HUNG CEILING - MEZZ.	MEZZANINE UPPER ESCALATOR PIT					CONT'D OF BCOM66c* AND VIA BCOM141 IN COLUMN

CONDUIT DESIG.	SIZE	TYPE	DWG. NO.	FROM	TO	FUNCTION	VOLTAGE	CONDUCTORS NO.	CONDUCTORS SIZE	REMARKS
BCOM66b	2"	GSR	E-126,23	S.R.A. PLENUM 1	J.B.ON BOTTOM OF SLAB AT 5th PYLON FROM SOUTH END	EMERGENCY CALL STATION				INSTALL 1" CONDUIT THROUGH PLATFORM SLAB TO SOUTH. 1
BCOM66a	1"	GSR		S.R.A.PLENUM 1	J.B.ON BOTTOM OF SLAB AT 7th PYLON FROM NORTH END					FACE OF PYLON, CAP 1' ABOVE SLAB. 1
BCOM67ac*	2"	PVC	E-26,126	J.B. IN ENTRANCE ESCAL. MACHINE ROOM	MEZZ. - INTERFACE	ESCALATOR CONTROL				
BCOM67b		GSR	E-22	MEZZ. - INTERFACE	KIOSK					
BCOM68c*			E-23,126	COMMUNICATION ROOM	SOUTH R.A. PLENUM	FIRE DETECTOR				
BCOM68b			E-22	WIRE TROUGH IN HUNG CEILING - MEZZ.	MEZZ. - INTERFACE					CONT'D OF BCOM68c* AND VIA BCOM72 IN COLUMN
BCOM68ac*			E-26,126	MEZZ. - INTERFACE	J.B. IN ESCALATORWAY MACHINE ROOM					
BCOM69c*	1"		E-126	COMMUNICATION ROOM	SOUTH R.A. PLENUM	SPARE				CONT'D OF BCOM164*
BCOM69b			E-22	WIRE TROUGH IN HUNG CEILING - MEZZ.	MEZZ. INTERFACE	D.T.S				CONT'D OF BCOM69c* AND VIA WIRE TROUGH IN COLUMN
BCOM69a*			E-25,126	MEZZ.INTERFACE	CLEANERS' ROOM PASSAGEWAY					CONT'D OF BCOM69b SAME AS A11b B273
BCOM70ac*	2"		E-26,126	J.B. IN ESCALATORWAY MACHINE ROOM	MEZZ. - INTERFACE	ESCALATORWAY CONTROL				
BCOM70b			E-22	MEZZ. - INTERFACE	KIOSK	ESCALATORWAY CONTROL				
BCOM71c*			E-23,126	COMMUNICATION ROOM	SOUTH R.A. PLENUM	FIRE DETECTION FOR PLATFORM ESCALATOR				
BCOM71a			E-22	WIRE TROUGH IN HUNG CEILING - MEZZ.	PLATFORM ESCALATOR MACHINE ROOM					CONT'D OF BCOM71c* AND VIA BCOM32 IN COLUMN
BCOM72	4"		E-19		MEZZ.DROPPED CLG.CAVITY	FIRE DETECTION				VIA WIRE THROUGH IN COLUMN SEE BCOM65b, BCOM68b, BCOM64hb,BCOM108b,BCOM71a
BCOM69	2"		E-12,25 126	CLEANER'S ROOM-PASSAGEWAY	MECHANICAL ROOM-PASSAGEWAY.	D.T.S.				CONT'D OF BCOM69a* VIA B283a*
BCOM73	1"	GSR	E-22	KIOSK	PLATFORM ESCALATOR MACHINE ROOM	ESCALATOR CONTROL				
BCOM74c*	2"		E-23,126	COMMUNICATION ROOM	SOUTH R.A. PLENUM	FIRE DETECTOR				FOR FUTURE ENTRANCE ESCALATOR
BCOM75c*			E-23,126			ESCALATOR CONTROL				FOR FUTURE ENTRANCE ESCALATOR
BCOM76c*			E-23,126			FIRE DETECTOR				FOR FUTURE ESCALATORWAY
BCOM77c*			E-23,126			ESCALATOR CONTROL				FOR FUTURE ESCALATORWAY
BCOM78c*			E-23,126			FIRE DETECTOR				FOR FUTURE MEZZ. FUTURE ESCALATOR
BCOM79c*			E-23,126			ESCALATOR CONTROL				FOR FUTURE MEZZ. FUTURE ESCALATOR
BCOM80c* THRU BCOM83c*	4"	GSR	E-23,126	COMMUNICATION ROOM	SOUTH R.A. PLENUM	MISC. COMMUNICATION				FOR FUTURE MEZZ. KIOSK
BCOM84s	1"	GSR	E-10	COMMUNICATION ROOM	TRAIN CONTROL ROOM	PABX TELEPHONE IN SOUTH ANCIL. ROOM				SLEEVE
BCOM84as				SOUTH MECHANICAL ROOM						
BCOM84bs				COMMUNICATION ROOM	CORRIDOR					
BCOM84cs				COMMUNICATION ROOM	OPERATION ROOM					
BCOM84dc*	4"			SOUTH AC SWBD ROOM	CORRIDOR					

AS-BUILT CONDITION

* DENOTES EXISTING CONDUIT OR SLEEVE (TYPICAL) 1

● EXTEND CONDUIT STUBOUT AS REQ. TO CONN. TO PNL. OR SWBD

DESIGNED	R.S. CHU	8-29-79 DATE
DRAWN	S. SWAYTON	2-20-79 DATE
CHECKED	H.B. ZACHRISON	6-16-80 DATE
APPROVED	H.B. ZACHRISON	6-16-80 DATE

REFERENCE DRAWINGS

NUMBER	DESCRIPTION

REVISIONS

DATE	BY	DESCRIPTION
9-25-80	H.Z.	REVISED BCOM68c* ADDED BCOM66
4-30-82	HTN	1 CONDUIT FOR EMERGENCY CALL STA. PER PCO-88, AS-BUILT

3889-R STATE OF MARYLAND

WASHINGTON METROPOLITAN AREA TRANSIT AUTHORITY

MATHEWS • CHATELAIN • BEALL
ENGINEERS AND ARCHITECTS
SECTION DESIGNER

SUBMITTED Jerilyn R. Press DATE 8-15-80

DE LEUW, CATHER & COMPANY
GENERAL ENGINEERING CONSULTANT

HARRY WEESE & ASSOCIATES
GENERAL ARCHITECTURAL CONSULTANT

APPROVED

ROCKVILLE ROUTE
BETHESDA STATION
COMMUNICATION CONDUIT SCHEDULE

SCALE	DRAWING NO.	
NONE	FAII-E-153	M334-206

CONDUIT DESIG.	CONDUIT SIZE	CONDUIT TYPE	DWG. NO.	FROM	TO	FUNCTION	VOLTAGE	CONDUCTORS NO.	CONDUCTORS SIZE	REMARKS
BCOM85*	1"	GSR	E-10,23 E-126	COMMUNICATION ROOM	SOUTH R.A. PLENUM	PABX TELEPHONE FOR NORTH ANCIL. ROOM				
BCOM85ac*			E-10,126	NORTH R.A. PLENUM	NORTH BATTERY ROOM					
BCOM85ad			E-10	NORTH AC SWBD ROOM	NORTH BATTERY ROOM					SLEEVE
BCOM85bc*				NORTH AC SWBD ROOM	NORTH MECH. RM. MEZZ.					
BCOM85cd				MAINTENANCE ROOM	NORTH MECH. RM. MEZZ.					SLEEVE
BCOM85db			E-22	WIRE TROUGH IN HUNG CEILING - MEZZ.	MEZZ. - INTERFACE					VIA BCOM141 IN COLUMN
BCOM85dc*			E-10,25	MEZZ. - INTERFACE	CLEANER'S RM. - PASS.					
BCOM85cs			E-10	CLEANER'S RM. - PASS.	CORRIDOR - PASS.					SLEEVE
BCOM85ts			E-10	ENTRANCE ELEVATOR MACH. ROOM	CORRIDOR - PASS.					SLEEVE PART OF BCOM15s
BCOM85hs*			E-10,29	NORTH AC SWBD RM.	SAFETY WALK IN STATION - I.B.					SLEEVE
BCOM85hb			E-29	NORTH AC SWBD RM.	HIGH LEVEL NORTH VENT SHAFT	PABX TELEPHONE FOR T.P.S.S.				VIA BCOM85hs
BCOM85ha			E-32	HIGH LELVEL SHAFT NORTH VENT SHAFT	BETHESDA T.P.S.S.	PABX TELEPHONE FOR NORTH ANCIL. RM.				CONT'D OF BCOM85hb
BCOM85ks			E-10	NORTH MECH. RM. - MEZZ	PLATFORM ELEVATOR MACH. RM.	PABX TELEPHONE FOR NORTH ANCIL. RM.				SLEEVE
BCOM86*	1"	GSR	E-10,126	COMMUNICATION ROOM	SOUTH R.A. PLENUM	INTRUSION ALARMS IN NORTH ANCIL. RMS.				
BCOM86a*			E-10,126	NORTH R.A. PLENUM	NORTH F.E. CABINET - PLATF					
BCOM86bc*			E-10	NORTH BATTERY ROOM	NORTH F.E. CABINET - PLATF					
BCOM86cd			E-10	NORTH BATTERY ROOM	NORTH AC SWBD ROOM					SLEEVE
BCOM86dc*			E-10	NORTH MECH. RM. MEZZ.	NORTH AC SWBD ROOM					
BCOM86ms			E-10	NORTH MECH. RM. MEZZ.	MAINTENANCE ROOM					SLEEVE
BCOM86fb			E-22	WIRE TROUGH IN HUNG CEILING - MEZZ.	MEZZ. - INTERFACE	INTRUSION ALARM IN ANCIL. RMS. - PASS				VIA BCOM140 IN COLUMN
BCOM86fc			E-10,126	F.E. CABINET - PASS	MEZZ. - INTERFACE					
BCOM86gs			E-10	F.E. CABINET - PASS	CORRIDOR - PASS.					SLEEVE
BCOM86hs			E-10	NORTH MECH. RM. - MEZZ	PLATFORM ELEVATOR MACH. ROOM					
BCOM86ks			E-10	CORRIDOR - PASSAGEWAY	STAIR - PASS.					
BCOM86ls			E-10	CORRIDOR - PASSAGEWAY	CLEANER'S ROOM					
BCOM86mb			E-10	NORTH AC SWBD ROOM	SAFETY WALK IN STATION I.B.	FIRE ALARM SYSTEM FOR BETHESDA T.P.S.S.				
BCOM86mc*			E-29	NORTH AC SWBD ROOM	HIGH LEVEL NORTH VENT SHAFT					VIA BCOM86ms*
BCOM86ma			E-32	HIGH LEVEL OF NORTH VENT SHAFT	BETHESDA T.P.S.S.					CONT'D OF BCOM85mb

CONDUIT DESIG.	CONDUIT SIZE	CONDUIT TYPE	DWG. NO.	FROM	TO	FUNCTION	VOLTAGE	CONDUCTORS NO.	CONDUCTORS SIZE	REMARKS
BCOM87s	1"	GSR	E-10	COMMUNICATION ROOM	OPERATION ROOM	INTRUSION ALARM FOR SOUTH ANCIL. RMS.				SLEEVE
BCOM87as				COMMUNICATION ROOM	TRAIN CONTROL ROOM					SLEEVE
BCOM87bs				SOUTH MECH. RM. MEZZ.	TRAIN CONTROL ROOM					SLEEVE
BCOM87cc*				OPERATION ROOM	SOUTH AC SWBD ROOM					
BCOM87ds				SOUTH BATTERY ROOM	SOUTH AC SWBD ROOM					SLEEVE
BCOM87es				SOUTH BATTERY ROOM	CLEANERS RM. - PLATFORM					SLEEVE
BCOM87fs				CART STORAGE ROOM	CLEANERS RM. - PLATFORM					SLEEVE
BCOM87gc*				CART STORAGE ROOM	SOUTH F.E. CABINET - PLATFORM					
BCOM88c*	1"	GSR	E-23,126	COMMUNICATION ROOM	SOUTH R.A. PLENUM	VENTILATION CONTROL				
BCOM88ac*			E-126	NORTH R.A. PLENUM	NORTH MECH. RM. - MEZZ.					CONT'D OF BCOM88c*
BCOM89c*			E-23,126	COMMUNICATION ROOM	SOUTH R.A. PLENUM					
BCOM89b			E-22	WIRE TROUGH IN HUNG CEILING - MEZZ.	MEZZ. - INTERFACE					CONT'D OF BCOM89c* AND VIA WIRE TROUGH IN COLUMN
BCOM89ac*			E-126 E-127	MEZZ. - INTERFACE	MECH. ROOM PASS.					
BCOM90s	1"	GSR	E-24	COMMUNICATION ROOM	SOUTH MECH. ROOM - MEZZ.	VENTILATION CONTROL				SLEEVE
BCOM91c*	2"		E-23,126		SOUTH R.A. PLENUM	FUTURE COMM. & CCTV				
BCOM92c*			E-23,126			FUTURE COMM. & CCTV				
BCOM91ac*			E-24,126	NORTH R.A. PLENUM	J.B. IN ELEVATOR MACH. RM. PLATFORM					
BCOM92ac*			E-24,126	NORTH R.A. PLENUM	J.B. IN ELEVATOR MACH. RM. PLATFORM					
BCOM93c*	2"	GSR	E-24,126	J.B. IN PLATFORM ELEVATOR	NORTH R.A. PLENUM	FUTURE COMM. & CCTV				
BCOM94c*			E-24,126	J.B. IN PLATFORM ELEVATOR	NORTH R.A. PLENUM					
BCOM93as*			E-18	NORTH R.A. PLENUM	PLATFORM ELEVATOR PIT					
BCOM94as*			E-18	NORTH R.A. PLENUM	PLATFORM ELEVATOR PIT					
BCOM95c*	1"		E-23,24 E-126	COMMUNICATION ROOM	SOUTH R.A. PLENUM	FIRE DETECTOR				
BCOM96c*			E-24,126			INTRUSION ALARM				
BCOM97c*			E-23,126			PABX TELEPHONE				

M WASHINGTON METROPOLITAN TRANSIT AUTHORITY
AS BUILT CONDITION
BY RESIDENT ENGINEER DATE

* DENOTES EXISTING CONDUIT OR SLEEVE (TYPICAL)

● EXTEND CONDUIT STUBOUT AS REQ. TO CONN. TO PNL. OR SWBD

DESIGNED	P.S. CHU	8-25-78 DATE
DRAWN	G. GRAYTON	8-20-78 DATE
CHECKED	H.B. ZACHRISON	8-15-80 DATE
APPROVED	H.B. ZACHRISON	8-15-80 DATE

REFERENCE DRAWINGS

NUMBER	DESCRIPTION

REVISIONS

DATE	BY	DESCRIPTION

REGISTERED PROFESSIONAL ENGINEER 3889-R STATE OF MARYLAND

WASHINGTON METROPOLITAN AREA TRANSIT AUTHORITY

MATHEWS • CHATELAIN • BEALL
ENGINEERS AND ARCHITECTS
SECTION DESIGNER

SUBMITTED Jerry G. Weese DATE 8-15-80

DE LEUW, CATHER & COMPANY
GENERAL ENGINEERING CONSULTANT

HARRY WEESE & ASSOCIATES
GENERAL ARCHITECTURAL CONSULTANT

APPROVED

ROCKVILLE ROUTE
BETHESDA STATION
COMMUNICATION CONDUIT SCHEDULE

SCALE	DRAWING NO.	
NONE	FAII-E-54	M334-207

CONDUIT DESIG.	CONDUIT SIZE	CONDUIT TYPE	DWG. NO.	FROM	TO	FUNCTION	VOLTAGE	CONDUCTORS NO.	CONDUCTORS SIZE	REMARKS
BCOM95a*	1"	GSR	E-126	NORTH R.A. PLENUM	J.B. IN PLATFORM ELEVATOR MACH. RM.	FIRE DETECTOR				CONT'D OF BCOM95c*
BCOM96a*						INTRUSION ALARM				CONT'D OF BCOM96c*
BCOM97a*			E-24 E-126			PABX TELEPHONE				CONT'D OF BCOM97c*
BCOM98c*			E-24 E-126			FIRE DETECTOR				FOR PLATFORM ELEVATOR PIT
BCOM99c*			E-24 E-126			INTRUSION ALARM				
BCOM98as*			E-18		PLATFORM ELEVATOR PIT	FIRE DETECTOR				CONT'D BCOM98c*
BCOM99as*			E-18			INTRUSION ALARM				CONT'D BCOM99c*
BCOM 100ac*	2"	GSR	E-24 E-126	J.B. IN PLATFORM ELEVATOR MACH. RM.	NORTH R.A. PLENUM	ELEVATOR CONTROL [2]				RUN CONDUIT IN PLENUM TO ELEVATOR PIT [2]
BCOM 101ac*			E-24 E-126							
BCOM 102c*	2"	GSR	E-24 E-126	J.B. IN PLATFORM ELEVATOR MACH. RM.	NORTH R.A. PLENUM	ELEVATOR CONTROL [2]				RUN CONDUIT IN PLENUM TO ELEVATOR PIT [2]
BCOM 103c*			E-24 E-126							
BCOM 102as*			E-18	MID R.A. PLENUM	PLATFORM ELEVATOR PIT					SLEEVE
BCOM 103as*			E-18							
BCOM 104c*	2"	GSR	E-23 E-126	COMMUNICATION ROOM	SOUTH R.A. PLENUM	FUTURE COMMUNICATION & CCTV				
BCOM 104b*			E-18	WIRE TROUGH IN HUNG CEILING - MEZZ.	MEZZ. INTERFACE					CONT'D OF BCOM104c* VIA BCOM119 IN COLUMN
BCOM 104ac*			E-126	MEZZ. - INTERFACE	J.B. IN ENTRANCE ELEVATOR MACH. RM.					
BCOM 105c			E-23 E-126	COMMUNICATION ROOM	SOUTH R.A. PLENUM					
BCOM 105b			E-18	WIRE TROUGH IN HUNG CEILING - MEZZ.	MEZZ. - INTERFACE					CONT'D OF BCOM105c* VIA BCOM119 IN COLUMN
BCOM 105ac*			E-25	MEZZ. - INTERFACE	J.B. IN ENTRANCE ELEVATOR MACH. RM.					
BCOM 106s*			E-25	ENTRANCE ELEVATOR MACH. RM.	ENTRANCE ELEVATOR PIT					SLEEVE
BCOM 106*			E-25	J.B. IN ENTRANCE ELEVATOR MACH. RM.						CONT'D OF BCOM106s*
BCOM 107s*			E-25	ENTRANCE ELEVATOR MACH. RM.						SLEEVE

CONDUIT DESIG.	CONDUIT SIZE	CONDUIT TYPE	DWG. NO.	FROM	TO	FUNCTION	VOLTAGE	CONDUCTORS NO.	CONDUCTORS SIZE	REMARKS
BCOM 108c*	1"	GSR	E-23,126	COMMUNICATION ROOM	SOUTH R.A. PLENUM	FIRE DETECTOR				
BCOM 108b			E-22	WIRE TROUGH IN HUNG CEILING - MEZZ.	MEZZ. - INTERFACE					CONT'D OF BCOM108c* VIA BCOM72 IN COLUMN
BCOM 108ac*			E-25,126	MFSS. - INTERFACE	J.B. IN ENTRANCE ELEVATOR MACH. ROOM					
BCOM 109c*			E-126	COMMUNICATION ROOM	SOUTH R.A. PLENUM	INTRUSION ALARM				
BCOM 109b			E-22	WIRE TROUGH IN HUNG CEILING - MEZZ.	MEZZ. - INTERFACE					CONT'D OF BCOM109c* VIA BCOM140 IN COLUMN
BCOM 109ac*			E-25,126	MEZZ. - INTERFACE	J.B. IN ENTRANCE ELEVATOR MACH. ROOM					
BCOM 110c*			E-23,126	COMMUNICATION ROOM	SOUTH R.A. PLENUM	PABX TELEPHONE				
BCOM 110b			E-22	WIRE TROUGH IN HUNG CEILING - MEZZ.	MEZZ. - INTERFACE					CONT'D OF BCOM110c* VIA BCOM141 IN COLUMN
BCOM 110ac*			E-25,126	MEZZ. - INTERFACE	J.B. IN ENTRANCE ELEVATOR MACH. ROOM					
BCOM 111s*			E-25	ENTRANCE ELEVATOR MACH. ROOM	ENTRANCE ELEVATOR PIT	FIRE DETECTOR				SLEEVE
BCOM 112s*			E-25	ENTRANCE ELEVATOR MACH. ROOM	ENTRANCE ELEVATOR PIT	INTRUSION ALARM				SLEEVE
BCOM 113b	2"	GSR	E-22	KIOSK	MEZZ. - INTERFACE	SURVEILLANCE CONTROL & INTERCOM				
BCOM 113c*			E-25,126	MEZZ. - INTERFACE	J.B. IN ENTRANCE ELEVATOR MACH. ROOM					
BCOM 114b			E-22	KIOSK	MEZZ INTERFACE					
BCOM 114c*			E-25,126	MEZZ. - INTERFACE	J.B. IN ENTRANCE ELEVATOR MACH. ROOM					
BCOM 115s*			E-25	ENTRANCE ELEVATOR MACH. ROOM	ENTRANCE ELEVATOR PIT	SPARE				SLEEVE
BCOM 116s*			E-25	ENTRANCE ELEVATOR MACH. ROOM	ENTRANCE ELEVATOR PIT	ELEVATOR CONTROL				SLEEVE
BCOM 115*			E-25	ENTRANCE ELEVATOR PIT	ENTRANCE ELEVATOR SHAFT - HIGH LEVEL	SPARE				
BCOM 116*			E-25	ENTRANCE ELEVATOR PIT	ENTRANCE ELEVATOR SHAFT - HIGH LEVEL	SPARE				
BCOM 117c*	1"		E-23,126	COMMUNICATION ROOM	SOUTH R.A. PLENUM	FIRE DETECTOR				FOR FUTURE ESCALATOR ON EXISTING MEZZ.
BCOM 118c*			E-23, 126	COMMUNICATION ROOM	SOUTH R.A. PLENUM	SPARE				
BCOM 115a	2"		E-25	ENTRANCE ELEVATOR PIT	ENTRANCE ELEVATOR SHAFT - HIGH LEVEL	ELEVATOR CONTROL				
BCOM 119 [1]	3" EXTEND NO. R.A. PLENUM		E-18	NORTH R.A. PLENUM TO SO. R.A. PLENUM	MEZZ. DROPPED CLG. CAVITY	FUTURE COMM. & CCTV				VIA WIRE TROUGH IN COLUMN. SEE BCOM104b & BCOM105b [1]
BCOM 120ac*	4"		E-23,126	COMMUNICATION ROOM	SOUTH R.A. PLENUM	TELEPHONE CABLE				
BCOM 120b [1]	3"		E-22,18	NORTH R.A. PLENUM	MEZZ. - INTERFACE					VIA WIRE TROUGH IN COLUMN [1]
BCOM 120c*	4"		E-25,126	MEZZ. - INTERFACE	BELL SYSTEM ROOM					
BCOM 121c*	3"		E-25,26	BELL SYSTEM ROOM	STREET LEVEL (C&P TELEPHONE M.H.)					
BCOM 122c*			E-25,26							
BCOM 123c*			E-25,26							

[2]

* DENOTES EXISTING CONDUIT OR SLEEVE (TYPICAL)

● EXTEND CONDUIT STUBOUT AS REQ. TO CONN. TO PNL. OR SWBD

AS-BUILT CONDITION

DESIGNED	P.S. CHU	8-29-79 DATE
DRAWN	G. GRAYTON	8-20-79 DATE
CHECKED	H. S. ZACKRISON	8-15-80 DATE
APPROVED	H. S. ZACKRISON	8-15-80 DATE

REFERENCE DRAWINGS

NUMBER	DESCRIPTION

REVISIONS

DATE	BY		DESCRIPTION
7-12-83	HTN	1	CONDUIT CHANGES UNDER MEZZ. PER PCO-46
—	—	2	CONDUITS FOR ELEVATOR CONTROL WIRING PER PCO-87, AS-BUILT.

REGISTRATION NO. 3889-R STATE OF MARYLAND

WASHINGTON METROPOLITAN AREA TRANSIT AUTHORITY

MATHEWS • CHATELAIN • BEALL
ENGINEERS AND ARCHITECTS
SECTION DESIGNER

SUBMITTED [signature] DATE 8-15-80

DE LEUW, CATHER & COMPANY
GENERAL ENGINEERING CONSULTANT

HARRY WEESE & ASSOCIATES
GENERAL ARCHITECTURAL CONSULTANT

APPROVED [signature]

ROCKVILLE ROUTE
BETHESDA STATION
COMMUNICATION CONDUIT SCHEDULE

SCALE: NONE

DRAWING NO. FAII-E-154

M334-208

CONDUIT DESIG.	CONDUIT SIZE	CONDUIT TYPE	DWG. NO.	FROM	TO	FUNCTION	VOLTAGE	CONDUCTORS NO.	CONDUCTORS SIZE	REMARKS
BCOM 124a*	2"	GSR	E-25	VOID SPACE - PASSAGEWAY	TELEPHONE BOOTH - FREE AREA	PUBLIC TELEPHONE - FREE AREA				SLEEVE
BCOM 124a			E-25	BELL SYSTEM ROOM	TELEPHONE BOOTH - FREE AREA					VIA BCOM124a*
BCOM 125c*			E-25 E-126	BELL SYSTEM ROOM	MEZZ. - INTERFACE	PUBLIC TELEPHONE - PAID AREA				
BCOM 125b			E-22	MEZZ. - INTERFACE	TELEPHONE BOOTH - PAID AREA					VIA BCOM125a*[1]
BCOM 125a*			E-22	HUNG CEILING CAVITY UNDER MEZZ.						SLEEVE THRU FLOOR SLAB
BCOM 126	2"	GSR	E-22	KIOSK	MEZZ. - INTERFACE	ELEVATOR CONTROL				
BCOM 127			E-22	KIOSK	MEZZ. - INTERFACE	SPARE				
BCOM 126a*			B-25,126	MEZZ. - INTERFACE	J.B. IN ENTRANCE ELEVATOR MACH. ROOM	ELEVATOR CONTROL				
BCOM 127a*			B-25,126	MEZZ. - INTERFACE	J.B. IN ENTRANCE ELEVATOR MACH. ROOM	SPARE				
BCOM 128a*			E-25	ENTRANCE ELEVATOR MACH. ROOM	ENTRANCE ELEVATOR PIT	ELEVATOR CONTROL				SLEEVE
BCOM 129a*			E-25	ENTRANCE ELEVATOR MACH. ROOM	ENTRANCE ELEVATOR PIT	SPARE				SLEEVE
BCOM 130a*	2"	GSR	B-24,126	NORTH R.A. PLENUM	PLATFORM ELEVATOR MACH. ROOM	SURVEILLANCE CONTROL & MAINTENANCE				
BCOM 131a*			B-24,126	NORTH R.A. PLENUM	PLATFORM ELEVATOR MACH.					
BCOM 132a*			B-24,126	J.B. IN ENTRANCE ELEVATOR MACH. ROOM	NORTH R.A. PLENUM	ELEVATOR CONTROL				
BCOM 133a*			B-24,126	J.B. IN ENTRANCE ELEVATOR MACH. ROOM	NORTH R.A. PLENUM					
BCOM 132ba*			E-18	NORTH R.A. PLENUM	PLATFORM ELEVATOR PIT					SLEEVE
BCOM 133ba*			E-18	NORTH R.A. PLENUM	PLATFORM ELEVATOR PIT					SLEEVE
BCOM 134*	3/4"	GSR	E-24,126	PLATFORM ELEVATOR MACH.	NORTH R.A. PLENUM	EMERGENCY COMM. CALL STATION				
BCOM 134a*			E-24,126	SOUTH R.A. PLENUM	SOUTH END WALL	EMERGENCY COMM. CALL STATION				
BCOM 135*	2½"	PVC	E-17	NORTH O.B. TUNNEL	NORTH SIDE WALL OVER O.B. TRACK	ANTENNA CABLE - O.B.				IN NORTH END WALL
BCOM 136*			E-17	CENTER OF VAULT	NORTH SIDE WALL OVER O.B. TRACK	ANTENNA CABLE - MEZZ.				IN NORTH END WALL
BCOM 137*			E-17	NORTH I.B. TUNNEL	NORTH SIDE WALL OVER I.B. TRACK	ANTENNA CABLE - I.B.				IN NORTH END WALL
BCOM 138*			E-17	SOUTH O.B. TUNNEL	SOUTH SIDE WALL OVER O.B. TRACK	ANTENNA CABLE - O.B.				IN SOUTH END WALL
BCOM 139*			E-17	SOUTH O.B. TUNNEL	SOUTH SIDE WALL OVER I.B. TRACK	ANTENNA CABLE - I.B.				IN SOUTH END WALL
BCOM 140	3"	GSR	E-18	NORTH R.A. PLENUM	MEZZ. DROPPED CLG. CAVITY	INTRUSION ALARM				VIA WIRE TROUGH IN COLUMN. SEE BCOM68b & BCOM86fb
BCOM 141			E-19			PABX				VIA WIRE TROUGH IN COLUMN SEE BCOM85 & BCOM110b
BCOM 142						SPARE				VIA WIRE TROUGH IN COLUMN

CONDUIT DESIG.	CONDUIT SIZE	CONDUIT TYPE	DWG. NO.	FROM	TO	FUNCTION	VOLTAGE	CONDUCTORS NO.	CONDUCTORS SIZE	REMARKS
BCOM 143*	2"	GSR	B-23,126	COMMUNICATION ROOM	SOUTH R.A. PLENUM	D.T.S.				
BCOM 144*			B-23,126	COMMUNICATION ROOM	SOUTH R.A. PLENUM					
BCOM 143a*			B-17,126	NORTH R.A. PLENUM	NORTH VENT SHAFT ADIT					
BCOM 144a*			B-17,126	NORTH R.A. PLENUM	NORTH VENT SHAFT ADIT					
BCOM 143c			E-17	NORTH VENT SHAFT ADIT	NORTH VENT SHAFT HIGH LEVEL					
BCOM 144c			E-17	NORTH VENT SHAFT ADIT	NORTH VENT SHAFT HIGH LEVEL					
BCOM 143b*			E-32	NORTH VENT SHAFT HIGH LEVEL	BETHESDA T.P.S.S.					
BCOM 144b*			E-32	NORTH VENT SHAFT HIGH LEVEL	BETHESDA T.P.S.S.					EXTEND VIA B249a*
BCOM 155*	1"	GSR	B-10,127	ENTRANCE ELEVATOR MACH. ROOM	MECH. RM. ATTIC LEVEL	PABX TELEPHONE				
BCOM 161*	2"	GSR	E-32	NORTH VENT SHAFT HIGH LEVEL	BETHESDA T.P.S.S.	SPARE				
BCOM 162*			E-32							
BCOM 163*			E-32							
BCOM 164*	2"	GSR	B-17,126	NORTH R.A. PLENUM	NORTH AC SWBD ROOM	D.T.S.				CONT'D OF BCOM69c*
BCOM 164a			E-17,24 126	NORTH ACSWBD ROOM	NORTH MECH RM.-MEZZ.					VIA B204a*
BCOM 165	3"	GSR	E-19	NORTH R.A. PLENUM	MEZZ. DROPPED CEILING CAVITY	SPARE				
BCOM 166a*	4"	GSR		DOME SPACE AT JUNCTION OF STATION & FUT. PASSAGEWAY	DOME SPACE	FUTURE CCTV.				SLEEVE THRU COLLAR - ± FOR FUTURE PASSAGEWAY
BCOM 167a*	1"	GSR			DOME SPACE	FUTURE P.A. SYSTEM				SLEEVE THRU COLLAR - ± FOR FUTURE PASSAGEWAY
BCOM 150	1"	GSR	E-22	KIOSK	MEZZANINE ESCALATOR UPPER PIT	ELEVATOR CONTROL				
BCOM 151*	2"		E-24,126	J.B. IN PLATFORM ELEVATOR MACH. ROOM	NORTH R.A. PLENUM	ELEVATOR CONTROL				SPARE
BCOM 152*										
BCOM 151aa*[1]	2½"		E-18	NORTH R.A. PLENUM	PLATFORM ELEVATOR PIT					SLEEVE
BCOM 152aa*	2"									SLEEVE

AS-BUILT CONDITION
RESIDENT ENGINEER — DATE

* DENOTES EXISTING CONDUIT OR SLEEVE (TYPICAL)

● EXTEND CONDUIT STUBOUT AS REQ. TO CONN. TO PBL. OR SWBD.

± NOT SHOWN ON PLANS SEE CONTRACT A11b

DESIGNED	P. S. CHU	9-20-78 DATE
DRAWN	G. GRAYTON	9-20-78 DATE
CHECKED	H. B. ZACHRISON	9-18-80 DATE
APPROVED	H. B. ZACHRISON	9-18-80 DATE

REFERENCE DRAWINGS

NUMBER	DESCRIPTION

REVISIONS

DATE	BY	DESCRIPTION
9-25-80	H.Z.	ADDED CONDUIT, DWG.REF. & FUNCTION
		DELETED TWO CONDUITS
7-13-83	HTN	[1] CONDUITS FOR ELEV.CONTROL WIRING
		PER PCO-87, AS-BUILT

3889-R

STATE OF MARYLAND

WASHINGTON METROPOLITAN AREA TRANSIT AUTHORITY

MATHEWS • CHATELAIN • BEALL
ENGINEERS AND ARCHITECTS
SECTION DESIGNER

SUBMITTED _____ DATE 8-15-80

DE LEUW, CATHER & COMPANY
GENERAL ENGINEERING CONSULTANT

HARRY WEESE & ASSOCIATES
GENERAL ARCHITECTURAL CONSULTANT

APPROVED _____

ROCKVILLE ROUTE
BETHESDA STATION
COMMUNICATION CONDUIT SCHEDULE

SCALE	DRAWING NO.	
NONE	FAII-E-55	M334-209

CONDUIT DESIG.	CONDUIT SIZE	CONDUIT TYPE	DWG. NO.	FROM	TO	FUNCTION	VOLTAGE	CONDUCTORS NO.	CONDUCTORS SIZE	REMARKS
B1 THRU B3	5"	AC	E-28	NORTH AC SWBD RM.	STREET LEVEL	PEPCO SERVICE	13KV			
B4 THRU B6			E-31	SOUTH AC SWBD RM.						
B7* THRU B12*			E-33	BETHESDA T.P.S.S.						
B13*	1"	PVC	E-28	NORTH VENT SHAFT UPPER STRUCTURE	OUTSIDE GROUND	STRAY CURRENT TEST				SLEEVE
B13a	1"	GSR	E-28	J.B. AT NORTH VENT SHAFT ADIT	NORTH VENT SHAFT HIGH LEVEL			2	#6	VIA B13*
B14*	1"	PVC	E-30	ELM STREET VENT SHAFT UPPER STRUCTURE	OUTSIDE GROUND					SLEEVE
B14a	1"	GSR	E-30	J.B. AT ELM STREET VENT SHAFT ADIT				2	#6	VIA B14*
B17*	1"	GSR	E-16,17	STUB-OUT AT NORTH VENT SHAFT ADIT	EMERGENCY TRIP STATION #1 O.B.	EMERGENCY TRIP STATION-BLUE LIGHT	120V	2	#12	NEL/1
B17a			E-16,17	EMERGENCY TRIP STATION #2 I.B.						
B17b			E-16	STUB-OUT AT NORTH VENT SHAFT ADIT	~~EXIT SIGN-I.B. AT NORTH VENT SHAFT ADIT~~ 1 ETS. LIGHTS					
B18*	2"		E-14,17 E-127	NORTH AC SWBD RM.	NORTH SAFETY WALK - O.B.	EMERGENCY LTG. FDR	480V	4	#8	NEH FBNEL-O.B. ●
B19*						ESSENTIAL FDR	480V	4	#8	FBNL-O.B. NT-8,10,12 ●
B20*						NON-ESSENTIAL FDR	480V	4	#8	NPON FBNP-O.B. ●
B21*	4"					SPARE				
B22*						WEST VIRGINIA FAN SHAFT	480V	3 1	#3/0 #6 GND	NORTH ESS. SWBD FDWV-1 ●
B23*	3"		E-14,17			GROUND WIRE		1	#4/0	TO GROUND BUS
B24*						SPARE				
B25*										
B922*	4"									
B924*	3"									
B925*	3"									
B27*	2"	GSR	E-14,17 E-127	NORTH AC SWBD RM.	NORTH SAFETY WALK - I.B.	EMERGENCY LTG. FDR	480V	4	#10	NEH FBNEL-I.B. ●
B28*						ESSENTIAL FDR	480V	4	#8	FBNL-I.B. NT/7,9,11 ●
B29*						NON-ESSENTIAL FDR	480V	3	#8	NPON FBNP-I.B. ●
B30*			E14,17			GROUND WIRE		1	#4/0	TO GROUND BUS
B31*	3"					SPARE				
B931*	4"									
B932*										
B927*	2"									
B928*										

CONDUIT DESIG.	CONDUIT SIZE	CONDUIT TYPE	DWG. NO.	FROM	TO	FUNCTION	VOLTAGE	CONDUCTORS NO.	CONDUCTORS SIZE	REMARKS
B929*	2"	GSR	E-14,17	NORTH AC SWBD RM.	NORTH SAFETY WALK - I.B.	SPARE				
B930*										
B32*	4"	GSR	E-17,19 E-127	SOUTH AC SWBD RM.	SOUTH SAFETY WALK - O.B	EMERGENCY LTG. FDR	480V	4	#8	FBSEL-OB SEH/8,10,12 ●
B33*						ESSENTIAL FDR		4	#8	FBSL-OB ST/8,10,12 ●
B34*						NON-ESSENTIAL FDR		3	#1/0	FBSP-OB SPON/1 ●
B35*						NORWOOD FAN SHAFT FDR	480V	4 1	#1/0 MCM #6 GND.	FBWD SOUTH ESS BUS ●
B36*			E-17,19			GROUND WIRE		1	#4/0	TO GROUND BUS
B936*			E-17,19			SPARE				
B37*	1"	GSR	E-16,17 E-30	EMERGENCY TRIP STATION #3 - O.B.	SOUTH SAFETY WALK - I.B.	EMERGENCY TRIP STATION BLUE LIGHT	120V	2	#12	
B37a*			E-16,17		EMERGENCY TRIP STATION #4 - I.B.					1
B38*	4"		E-17,19	SOUTH AC SWBD RM	SOUTH SAFETY WALK - I.B.	GROUND WIRE		1	#4/0	TO GROUND BUS
B39*			E-17,19 E-127			EMERGENCY LTG FDR	480V	4	#8	FBSEL-IB SEH/5,7,9 ●
B40*						ESSENTIAL FDR	480V	4	#8	FBSL - IB NT/7,9,11 ●
B41*						NON-ESSENTIAL FDR	480V	3	#1/0	FBSP - IB SPON/2 ●
B42*						SPARE				●
B43*						SPARE				
B943*			E-17,19							
B44*	4"	GSR	E-17,126	SOUTH AC SWBD RM.	SOUTH R.A. PLENUM	TIE CABLES	480V	4 1	500 MCM #2 GND	SOUTH 480V BUS ●
B45*										
B46*										
B47*										
B48*										
B49*										

AS BUILT CONDITION
SEP 19 1983
DATE

* DENOTES EXISTING CONDUIT OR SLEEVE (TYPICAL)

● EXTEND CONDUIT STUBOUT AS REQ. TO CONN. TO PNL. OR SWBD

DESIGNED	R.S. CHU	9-29-78 DATE
DRAWN	G. GRAYTON	2-20-78 DATE
CHECKED	H. B. ZACKRISON	6-16-80 DATE
APPROVED	H. B. ZACKRISON	6-16-80 DATE

REFERENCE DRAWINGS

NUMBER	DESCRIPTION

REVISIONS

DATE	BY	DESCRIPTION
7-13-83	HTN	1 REVISED PER PCO-78, AS-BUILT

3869-R

WASHINGTON METROPOLITAN AREA TRANSIT AUTHORITY

MATHEWS • CHATELAIN • BEALL
ENGINEERS AND ARCHITECTS
SECTION DESIGNER

SUBMITTED [signature] DATE 8-15-80

DE LEUW, CATHER & COMPANY
GENERAL ENGINEERING CONSULTANT ■

HARRY WEESE & ASSOCIATES
GENERAL ARCHITECTURAL CONSULTANT □

APPROVED [signature]

ROCKVILLE ROUTE
BETHESDA STATION
AC POWER CONDUIT SCHEDULE

SCALE: NONE
DRAWING NO. FAII-E-56
M334-210

CONDUIT DESIG.	CONDUIT SIZE	CONDUIT TYPE	DWG. NO.	FROM	TO	FUNCTION	VOLTAGE	CONDUCTORS NO.	CONDUCTORS SIZE	REMARKS
B44a*	4"	GSR	E-17,126	NORTH R.A. PLENUM	NORTH AC SWBD RM	TIE CABLE	480V	4 1	500 MCM #2 GND	NORTH 480V BUS
B45a*										●
B46a*										●
B47a*										●
B48a*										●
B49a*										●
B50s*	3"		E-17	NORTH AC SWBD RM	NORTH SAFETY WALK IN STATION - I.B.	ENTRANCE ESCALATOR MOTOR FEEDER				SLEEVE ●
B51s*										SLEEVE
B50a			E-28,17		STUB-OUT AT NORTH VENT SHAFT - HIGH LEVEL		480V	4 1	300 MCM #2 GND	VIA B50s* N. ESS SWBD ●
B51a										VIA B51s* N. ESS SWBD ●
B50*			E-17,26 E-32	STUB-OUT AT NORTH VENT SHAFT - HIGH LEVEL	ESCALATORWAY MACH. RM					
B51*			E-17,26 E-32							
B52s*	1"	GSR	E-17	NORTH AC SWBD RM	NORTH SAFETY WALK IN STATION - I.B.	ENTRANCE ESCALATOR MOTOR FEEDER				SLEEVE
B52a			E-28,17		STUB-OUT AT HIGH LEVEL NORTH VENT SHAFT					~~VIA B53s*~~ ● SPARE - USE B75 [1]
B52*			E-17,26 E-32	STUB-OUT AT HIGH LEVEL NORTH VENT SHAFT	ENTRANCE ESCALATOR MACHINE ROOM					
										[1]
B53a			E-17,28	NORTH AC SWBD RM	STUB-OUT AT HIGH LEVEL NORTH VENT SHAFT	EMERGENCY LIGHTS FOR ESCALATORS	480V	2 1	#8 #10GND	PANEL NEL NEH CR.2 ● SAME AS A11b BCOM101*
B53*			E-26,32	STUB-OUT AT HIGH LEVEL NORTH VENT SHAFT	ENTRANCE ESCALATOR MACHINE ROOM					
B53b	2"		E-32	BETHESDA TPSS						●
B53s	1"		E-17	NORTH AC SWBD RM	NORTH SAFETY WALK IN STATION - I.B.					SLEEVE
B54* [3]	3/4" 1 1/2"	PVC SURFACE	E-17,20 E-127 MOUNTED	SOUTH AC SWBD RM CONDUIT FOR 8#10 AND 2#10	J.B. UNDER SOUTH SAFETY WALK IN STATION - O.B.	ESSENTIAL LIGHTING	480V NON LOW SMOKE XHHW [4]	4	#10	ST/2,4,6 ●
B55* [3]	3/4"					EMER. LIGHTING	277V	2 1	#10 #6 LOW SMOKE [3]	SEH/3 ●
B56*	3/4"	GSR			J.B. IN SOUTH R.A. PLENUM	RECEPTACLES & LTG. IN SOUTH R.A. PLENUM	120V 120V 208V	2 2 3	#10 #10 #10	SPP/ SPPL/2 SPP/2,4 ●
B57* [3]	3/4"		E-17,20			PLATFORM EDGE LIGHTS - O.B.	208V	4	#10	SPPL/1,3,5 ●
B58*	3/4"		E-20,126		J.B. IN SOUTH DOME SPACE	RECEPTACLES & LTG. IN SOUTH DOME SPACE	120V 120V	2 2	#10 #10	SPP/1 SPPL/4 ●
B59*			E-17,20 E-127		J.B. IN SOUTH R.A. PLENUM	ESS. PYLON LIGHTS - PLATFORM LEVEL	480V	4	#10	SP/1,3,5 ●
B60* [3]	3/4"	PVC			J.B. UNDER SOUTH SAFETY WALK IN STATION - I.B.	EMERGENCY LTG.	277V	2	#10 #6 LOW SMOKE [3]	SEH/1 ●
B61* [3]	3/4" 1 1/2"	SURFACE	MOUNTED	CONDUIT FOR 8#10 AND 2#10		ESS. LTG.	480V NON LOW SMOKE XHHW [4]	4	#10	ST/1,3,5 ●
B961*	1"	GSR	E-17,20		LAST J.B. (SOUTH END) - PLATFORM EDGE LTG. - I.B.	SPARE				

CONDUIT DESIG.	CONDUIT SIZE	CONDUIT TYPE	DWG. NO.	FROM	TO	FUNCTION	VOLTAGE	CONDUCTORS NO.	CONDUCTORS SIZE	REMARKS
B62* [3]	3/4" 1 1/2"	PVC SURFACE	E-17,18 E-127 MOUNTED	NORTH AC SWBD RM CONDUIT FOR 8#10 AND 2#10	J.B. UNDER NORTH SAFETY WALK IN STATION - O.B.	ESSENTIAL LTG.	480V NON LOW SMOKE XHHW [4]	4	#10	NT/2,4,6 ●
B63* [3]	3/4"					EMERGENCY LTG.	277V	2 1	#10 #6 LOW SMOKE [3]	NEH/3 ●
B64*	3/4"	GSR	E-17,18 E-126, E-127		J.B. IN NORTH DOME SPACE	RECEPTACLE AND LTG. IN NORTH DOME SPACE	120V 120V	2 2	#10 #10	NPP/1 NPPL/4 ●
B65*			E-17,18 E-127		J.B. IN NORTH R.A. PLENUM	NORTH PYLON LTG. - PLATFORM LEVEL	480V	4	#10	NP/1,3,5 ●
B66*						RECEPTACLES AND LTG. IN NORTH R.A. PLENUM	120V 208V	2 3	#10 #10	NPPL/2 NPP/2,4 ●
B67* [3]	3/4"		E-17,18			PLATFORM EDGE LIGHTS - I.B.	208V	4	#10	NPPL/1,3,5 ●
B68*	3/4"	PVC	E-17,18 E-127		J.B. UNDER NORTH SAFETY WALK IN STATION - I.B.	EMERGENCY LTG.	277V	2 1	#10 #6 LOW SMOKE [3]	NEH/1 ●
B69* [3]	3/4"			1 1/2" SURFACE MOUNTED CONDUIT FOR 8#10 AND 2#10		ESSENTIAL LTG.	480V NON LOW SMOKE XHHW [4]	4	#10	NT/1,3,5 ●
B969*		GSR	E-17,18		LAST J.B. (NORTH END) - PLATFORM EDGE LTG. - O.B.	SPARE				
B70s*	2"	GSR	E-17	NORTH AC SWBD RM	NORTH SAFETY WALK IN STATION - I.B.	EXTERIOR ESCALATOR MOTOR FDR				SLEEVE
B70a			E-17,28		STUB-OUT AT HIGH LEVEL NORTH VENT SHAFT		480V	4 1	#8 #10 GND	VIA B70s* NEON/5 ●
B70*			E-17,26 E-32	STUB-OUT AT HIGH LEVEL NORTH VENT SHAFT	EXTERIOR ESCALATOR MACHINE ROOM					
B71*	1"		E-26	ENTRANCE ESCALATOR MACHINE ROOM		SPARE		4 1	#12 #12 GND [1]	
B72*						EXTERIOR ESCALATOR AUX. SUPPLY		2 1	#12 #12 GND [1]	●
B73*						EMERGENCY LTG.				●
B77a	1"	GSR	E-22	WIRE TROUGH IN HUNG CEILING - MEZZ.	PLATFORM ESCALATOR MACHINE ROOM	SPARE FOR PLATFORM ESCALATOR				VIA B150 CONT'D OF B77c*
B75s*	3/4"		E-17	NORTH AC SWBD. RM.	NORTH SAFETY WALK IN STATION - I.B.	SITE LIGHTING PANEL "OLH" FEEDER				SLEEVE - SAME AS A11b B95bs*
B74c*	1"		E-17,127 E-126	NORTH AC SWBD RM	NORTH R.A. PLENUM	PLATFORM ESCALATORS - #1 & #2 MOTOR FDR	480V	3 1	#4 #8GND	NPON/1 ●
B74a	1 1/4"		E-22,18	WIRE TROUGH IN HUNG CEILING - MEZZ	PLATFORM ESCALATOR MACH. RM	PLATFORM ESCALATORS - #1 & #2 MOTOR FDR	480V			VIA B150 CONT'D OF B74c* ●
B75* [1]	2"		E-26,32	~~NORTH VENT SHAFT HIGH LEVEL~~	~~ESCALATORWAY MACH. RM~~ STUB OUT @ HIGH LEVEL NORTH VENT SHAFT	ENTRANCE ESCAL. MOTOR FEEDER	480V	4 1	#8 #10 GND	NEW 2" CONDUIT - PROVIDE OPENING THRU SWBD. WALL. NEW 30 KVA TRANS. IN MACH.RM. [1]
B75a	1"		E-17,28	NORTH AC SWBD RM	NORTH VENT SHAFT UPPER STRUCTURE	PANEL "OLH" FEEDER	480V	4 1	#10 #10 GND	VIA B75s* NP/6,8,10
B76c*	1"		E-17,126 E-127	NORTH AC SWBD RM	NORTH R.A. PLENUM	PLATFORM ESCALATOR AUX SUPPLY	208V	4 1	#12 #12GND	NPPL/6,8,10 ●
B76a			E-22	WIRE THROUGH IN HUNG CEILING - MEZZ	PLATFORM ESCALATOR MACH. RM					VIA B151 CONT'D OF B76c*
B77c*			E-17,22 E-126	NORTH AC SWBD RM	NORTH R.A. PLENUM	SPARE FOR PLATFORM ESCALATOR		1	2/0 GND	[2]
B78c*			E-17,126 E-127			FUTURE PLATFORM ESCALATOR MOTOR FDR				
B79*	2"		E-26,126	MEZZ. - INTERFACE	EXTERIOR ESCALATOR MACHINE ROOM	SPARE				

AS-BUILT CONDITION
RESIDENT ENGINEER — DATE SEP 1 1983

STATE OF MARYLAND — Harry Weese & Associates — Professional Engineers

* DENOTES EXISTING CONDUIT OR SLEEVE (TYPICAL)

● EXTEND CONDUIT STUBOUT AS REQ. TO CONN. TO PNL. OR SWBD

DESIGNED	R.S. CHU	8-29-78 DATE
DRAWN	G. GRAYTON	8-30-78 DATE
CHECKED	H.B. ZACKRISON	6-16-80 DATE
APPROVED	H.B. ZACKRISON	6-16-80 DATE

REFERENCE DRAWINGS NUMBER	DESCRIPTION

REVISIONS DATE	BY	DESCRIPTION
9-25-80	H.Z.	GENERAL REVISION
7-14-83	HTN	[1] REV. PER PCO-7 (IZ4057), AS BUILT
—	—	[2] REVISED PER PCO-10, AS-BUILT
—	—	[3] REVISED PER PCO-12 REV.1, AS-BUILT
—	—	[4] REVISED PER PCO-33, AS-BUILT
—	—	[5] REVISED PER PCO-79, AS-BUILT

3860-R

WASHINGTON METROPOLITAN AREA TRANSIT AUTHORITY

MATHEWS • CHATELAIN • BEALL
ENGINEERS AND ARCHITECTS
SECTION DESIGNER
SUBMITTED — DATE 8-15-80

DE LEUW, CATHER & COMPANY
GENERAL ENGINEERING CONSULTANT

HARRY WEESE & ASSOCIATES
GENERAL ARCHITECTURAL CONSULTANT
APPROVED

ROCKVILLE ROUTE
BETHESDA STATION
AC POWER CONDUIT SCHEDULE

SCALE: NONE
DRAWING NO.: FA11-E-156 M334-211

CONDUIT DESIG.	CONDUIT SIZE	CONDUIT TYPE	DWG. NO.	FROM	TO	FUNCTION	VOLTAGE	CONDUCTORS NO.	CONDUCTORS SIZE	REMARKS
B80c*	1"	GSR	E-17,127 E-126	NORTH AC SWBD RM	NORTH R.A. PLENUM	FUTURE PLATFORM ESCAL. AUX SUPPLY				
B81c*			E-17,126			SPARE FOR ENTRANCE ESCALATOR				
B81*			E-26,126	MEZZ. - INTERFACE	ENTRANCE ESCALATOR MACHINE ROOM					SAME AS A11b BCOM69ac* CONT'D OF B81c*
B 83*	2"		E-17,126	NORTH AC SWBD RM	NORTH R.A. PLENUM	TRAIN CONTROL RM FDR	480V	3 1	#4 #8 GND	ESS BUSS ●
B83a*				SOUTH R.A. PLENUM	SOUTH AC SWBD RM					CONT'D OF B83* EXTENDED TO TRANSFORMER
B84 *	2½"	GSR	E-17,126 E-127	NORTH AC SWBD RM	NORTH R.A. PLENUM	PNL "HM" FDR	480V	4 1	#2/0 #2GND	NPOE ●
B84a*			E-25,126	MEZZ INTER FACE	CLEANER'S RM - PASSAGEWAY					CONT'D OF B84b
B84b			E-22	WIRE TROUGH IN HUNG CEILING - MEZZ.	MEZZ INTERFACE					VIA B152 CONT'D OF B84*
B85*	1"		E-25,126	CLEANER'S RM - PASS	MEZZ INTERFACE	SPARE				
B86*	1"	GSR	E-20,25 E-126	CLEANER'S RM - PASS	MEZZ INTERFACE	ESS. LTG - MEZZ	480V	4	#12	HM/13,15,17 ●
B86a			E-20	MEZZ INTERFACE	ESS. LTG - MEZZ					
B87			E-20,25 E-126	CLEANER'S RM - PASS	MEZZ INTERFACE	EMERG LTG - MEZZ & PYLONS		4	#10	PEH/1,3,5 ●
B87a			E-20	MEZZ INTERFACE	EMERG LTG - MEZZ					
B88a*	3/4"	GSR	E-16	EJECTOR RM	STORAGE RM	RECEPTACLES	208V	4	#12	SLEEVE
B89*	2"	GSR	E-17,126	NORTH AC SWBD RM	NORTH R.A. PLENUM	SUMP PUMPS	120V	6	#10	SAME AS A11b BCOM165 THREE ● SEPARATE CKTS NPP/9,11,13
B90*	3/4"	GSR	E-16	SAFETY WALK - O.B. STA 388 + 12.33	SAFETY WALK - I.B. STA 388 + 12.33	EMERGENCY LIGHTING	277V	2	#12	SEH/2
B90as*					SOUTH STAIR - SMOKE LOBBY					SLEEVE
B90b			E-16,30	SAFETY WALK - I.B. STA. 388 + 12.33	ELM STREET VENT SHAFT ADIT					
B91as*	3/4"	GSR	E-16	SOUTH STAIR	SOUTH STAIR - SMOKE LOBBY					SLEEVE
B91bs*				CART STORAGE RM	SOUTH SAFETY WALK IN STATION - O.B.					
B91cs*					SOUTH SAFETY WALK IN STATION - I.B.					
B91ds*				EJECTOR RM	CART STORAGE RM					
B91gs*				CART STORAGE ROOM	SOUTH SAFETY WALK IN STATION - I.B.	SPARE				SLEEVE
B91fs*					SOUTH SAFETY WALK IN STATION - O.B.					

CONDUIT DESIG.	CONDUIT SIZE	CONDUIT TYPE	DWG. NO.	FROM	TO	FUNCTION	VOLTAGE	CONDUCTORS NO.	CONDUCTORS SIZE	REMARKS
B92as*	3/4"	GSR	E-16	SOUTH AC SWBD RM	SOUTH SAFETY WALK IN STATION - O.B.	ESSENTIAL LIGHTING	277V	2	#12	SLEEVE SP/4
B92bs*					SOUTH SAFETY WALK IN STATION - I.B.	SPARE				SLEEVE
B92cs*				SOUTH BATTERY RM	SOUTH SAFETY WALK IN STATION - O.B.	ESSENTIAL LIGHTING	277V	2	#12	SLEEVE SPP/3
B92ds*					SOUTH SAFETY WALK IN STATION - I.B.					
B92es*				EJECTOR RM	CART STORAGE RM					
B92			E-16,30	SOUTH A.C. SWBD. ROOM	ELM STREET VENT SHAFT		120V	3 [1]	#10	VIA 92bs* ST/20 [1]
B93as*	3/4"	GSR	E-16	EJECTOR RM	CART STORAGE RM	RECEPTACLES	120V	2	#12	SLEEVE SPP/3
B94*	3/4"	GSR	E-16	SAFETY WALK - I.B. AT STA 395 + 76.37	SAFETY WALK - I.B. AT STA 395 + 76.37	EMERGENCY LIGHTING	277V	2	#12	NEH/2
B94a*					SAFETY WALK - O.B. AT STA 395 + 78.37	SOUTH STAIR SMOKE LOBBY				
B94bs*					SOUTH STAIR SMOKE LOBBY	SOUTH STAIR				SLEEVE
B94cs*					NORTH STAIR	NORTH AC SWBD RM				
B94ds*				E-23		NORTH MECH. RM - MEZZ				
B94e				E-16,28 29	SAFETY WALK - I.B. AT STA. 395 + 76.37	NORTH VENT SHAFT ADIT				
B95as*				E-16	NORTH AC SWBD RM	NORTH SAFETY WALK IN STATION - O.B.	ESSENTIAL LIGHTING	277V	2	#12	SLEEVE
B95cs*					NORTH BATTERY RM	NORTH SAFETY WALK IN STATION - O.B.	EMERGENCY LIGHT				SLEEVE NEH/2
B95ds*						NORTH SAFETY WALK IN STATION - I.B.	NORTH VENT SHAFT. EMERGENCY LTG.	120V		#10	SLEEVE NEL/5 [1] [1]
B95				E-16,29, 28	NORTH A.C. SWBD. ROOM	NORTH VENT SHAFT					VIA B95as*
B96s*	4"	GSR	—	DONE SPACE - OVER PLATFORM	HUNG CEILING CAVITY OVER PASSAGEWAY (FUTURE)	SPARE FOR FUTURE PASSAGEWAY				SLEEVE THRU COLLAR-FOR FUTURE PASSAGEWAY
B97s*			—							
B98	3/4"		E-16,30	SOUTH A.C. SWBD. ROOM	ELM STREET VENT SHAFT	EMERGENCY LIGHTING	120V	2	#10	VIA B92as* SEL/3
B99			E-16,29	NORTH A.C. SWBD. ROOM	NORTH VENT SHAFT	ESSENTIAL LTG.				VIA B95bs* NPPL/9 [1] [1]
B100*	1½"	GSR	E-17,19 E-126	NORTH AC SWBD RM	NORTH R.A. PLENUM	PEPCO METER TIE CABLE				WIRING BY PEPCO
B100a*			E-126	SOUTH A.C. SWBD RM.	SOUTH R.A. PLENUM					
B101*	2"	GSR	E-126	NORTH AC SWBD RM	NORTH R.A. PLENUM	SWITCHGEAR CONTROL				
B101a*				SOUTH A.C. SWBD RM.	SOUTH R.A. PLENUM					

AS-BUILT CONDITION
RESIDENT ENGINEER SEP 1983 DATE

STATE OF MARYLAND — Harry R. Weese, Jr. — PROFESSIONAL ENGINEER

- • DENOTES EXISTING CONDUIT OR SLEEVE (TYPICAL)
- ● EXTEND CONDUIT STUBOUT AS REQ. TO CONN. TO PNL. OR SWBD
- ± NOT SHOWN ON PLANS SEE CONTRACT A11b

DESIGNED	R.S. CHU	8-20-78 DATE
DRAWN	S. GRAYTON	8-20-78 DATE
CHECKED	M. B. ZACKRISON	8-16-80 DATE
APPROVED	M. B. ZACKRISON	8-16-80 DATE

REFERENCE DRAWINGS

NUMBER	DESCRIPTION

REVISIONS

DATE	BY	DESCRIPTION
7/14/83	HTN	[1] REVISED PER FIELD COND., AS-BUILT

REGISTERED PROFESSIONAL ENGINEER 3860-R STATE OF MARYLAND

WASHINGTON METROPOLITAN AREA TRANSIT AUTHORITY

MATHEWS • CHATELAIN • BEALL
ENGINEERS AND ARCHITECTS
SECTION DESIGNER

SUBMITTED Jerilyn R. Cypress DATE 8-16-80

DE LEUW, CATHER & COMPANY
GENERAL ENGINEERING CONSULTANT ■

HARRY WEESE & ASSOCIATES
GENERAL ARCHITECTURAL CONSULTANT □

APPROVED Harry R. Weese

ROCKVILLE ROUTE
BETHESDA STATION
AC POWER CONDUIT SCHEDULE

SCALE NONE | DRAWING NO. FAII-E-57 | M334-212

CONDUIT DESIG.	CONDUIT SIZE	CONDUIT TYPE	DWG. NO.	FROM	TO	FUNCTION	VOLTAGE	CONDUCTORS NO.	CONDUCTORS SIZE	REMARKS
B102* THRU B107*	5"	AC	E-33	CHILLER PLANT	STREET LEVEL	SPARE				
B108s*	4"	GSR	E-25	DOME SPACE - OVER PLATFORM	HUNG CEILING CAVITY OVER PASSAGEWAY	SPARE				SLEEVE
B109s*			E-25							SLEEVE
B111*	1½"	GSR	E-17	EMER. TRIP STATION #1 - O.B.	NORTH VENT SHAFT ADIT	EMERGENCY TRIP				
B111b			E-17,28	NORTH VENT SHAFT ADIT	NORTH VENT SHAFT HIGH LEVEL					
B111a*			E-32	NORTH VENT SHAFT HIGH LEVEL	BETHESDA T.P.S.S.					
B112*	1½"	GSR	E-17	EMER. TRIP STATION #2 - I.B.	NORTH VENT SHAFT ADIT	EMERGENCY TRIP				
B112b			E-17	NORTH VENT SHAFT ADIT	NORTH VENT SHAFT HIGH LEVEL					
B112a*			E-32	NORTH VENT SHAFT HIGH LEVEL	BETHESDA T.P.S.S.					
B113*			E-17 E-126	EMER. TRIP STATION #1 - O.B.	NORTH R.A. PLENUM					
B113a*			E-17 E-126	SOUTH R.A. PLENUM	EMER. TRIP STATION #3 - O.B.					
B114*			E-17 E-126	EMER. TRIP STATION #2 - I.B.	NORTH R.A. PLENUM					
B114a*			E-17 E-126	SOUTH R.A. PLENUM	EMER. TRIP STATION #4 - I.B.					
B115*			E-32	BETHESDA T.P.S.S.	NORTH VENT SHAFT HIGH LEVEL					
B115a			E-28	NORTH VENT SHAFT HIGH LEVEL	NORTH SAFETY WALK IN TUNNEL - O.B.					
B116*			E-32	BETHESDA T.P.S.S.	NORTH VENT SHAFT HIGH LEVEL					
B116a			E-28	NORTH VENT SHAFT HIGH LEVEL	NORTH SAFETY WALK IN TUNNEL - I.B.					
B117*			E-17	EMER. TRIP STATION #2 - I.B.	EMER. TRIP STATION #1 - O.B.					
B118*			E-17,19	EMER. TRIP STATION #3 - O.B.	SOUTH SAFETY WALK IN TUNNEL - O.B.					
B119*			E-17,19	EMER. TRIP STATION #4 - I.B.	SOUTH SAFETY WALK IN TUNNEL - I.B.					
B120*			E-17	EMER. TRIP STATION #4 - I.B.	EMER. TRIP STATION #3 - O.B.					
B121s*	3/4"	GSR	E-22	MAPCASE & TEL. BOOTH PAID AREA	HUNG CEILING CAVITY - MEZZ.	MAP CASE LIGHT				SLEEVE
B121	3/4"	GSR	E-22	MAPCASE & TEL. BOOTH PAID AREA	RECEPTACLE AT KIOSK	MAP CASE LIGHT	120V	2	#12	NPP/2

CONDUIT DESIG.	CONDUIT SIZE	CONDUIT TYPE	DWG. NO.	FROM	TO	FUNCTION	VOLTAGE	CONDUCTORS NO.	CONDUCTORS SIZE	REMARKS
B123*	1"	GSR	E-24, E-126	J.B. IN PLATFORM ELEVATOR MACH RM	NORTH R.A. PLENUM	RECEPTACLE	120V	2	#12	
B123s*			E-18	NORTH R.A. PLENUM	PLATFORM ELEVATOR PIT					SLEEVE
B124s*	3/4"		E-25	ENTRANCE ELEVATOR MACH. RM	ENTRANCE ELEVATOR PIT	EMER. LIGHTS				
B125s*			E-25			LIGHTING & RECEPTACLES				
B125*			E-25	ENTRANCE ELEVATOR PIT	ENTRANCE ELEVATOR SHAFT HIGH LEVEL		120V	2	#12	
B126s*	1½"	GSR	E-29, E-17	NORTH AC SWBD RM	NORTH SAFETY WALK IN STATION - O.B.	ESS. LTG FDR				SLEEVE
B126b			E-29, E-17		NORTH VENT SHAFT HIGH LEVEL		480V	3	#10	VIA B126s* NPOE/4
B126a*			E-32	NORTH VENT SHAFT HIGH LEVEL	BETHESDA T.P.S.S.					
B127s*	2"		E-29, E-17	NORTH AS SWBD RM	NORTH SAFETY WALK IN STATION - O.B.	NON-ESS FDR				SLEEVE
B127b	1		1		NORTH VENT SHAFT HIGH LEVEL					SPARE 1
B127a*	2"		E-32	NORTH VENT SHAFT HIGH LEVEL	BETHESDA T.P.S.S.					SPARE 1
B128s*	1"		E-29, E-17	NORTH AC SWBD RM	NORTH SAFETY WALK IN STATION - O.B.	EMER. LTG FDR				SLEEVE
B128b			E-29, E-17		NORTH VENT SHAFT HIGH LEVEL		277V	2	#10	VIA B128s* NEH/5
B128a*			E-32	NORTH VENT SHAFT HIGH LEVEL	BETHESDA T.P.S.S.					
B129a*	2"		E-32			SPARE				
B130*	3/4"	GSR	E-26	J.B. AT FOLDING DOOR - PASSAGEWAY	ESCALATORWAY - LOWER PIT	FOLDING DOOR INTER-LOCK				
B131s			E-26							
B132*			E-25	CLEANER'S RM - PASSAGE-WAY	PASSAGEWAY	RECEPTACLE	120V	2	#12	MP/4 ●
B133s*	1½"		E-23, E-126	SOUTH MECH. RM - MEZZ	DOME SPACE	FUTURE FACILITIES				SLEEVE
B134*	3/4"		E-26,	ESCALATORWAY MACH. RM.	ENTRANCE	ENTRANCE WALL MTD LIGHTS (FUTURE)				●
B136*	1"		E-25	LIGHTING FIXTURES IN COLLAR	HUNG CEILING CAVITY PASSAGEWAY	REMOTE BALLAST WIRING TO ESS. LIGHTING	277V	-	#12	SEE DWG E-25 FOR WIRE COUNT HM-6,8,10
B137*			T	J.B. IN COLLAR (FUTURE PASSAGEWAY)	HUNG CEILING CAVITY-FUTURE PASSAGEWAY	SPARE FOR FUTURE PASSAGEWAY				NOT SHOWN ON PLANS SEE CONTRACT A11b DWG. E-8
B135*	2"		E-26	ESCALATOR WAY MACHINE ROOM	ENTRANCE	FUTURE LIGHTING				

AS-BUILT CONDITION

RESIDENT ENGINEER — DATE SEP 19 1983

STATE OF MARYLAND — HARRY W. WEESE, JR. — REGISTERED PROFESSIONAL ENGINEER

* DENOTES EXISTING CONDUIT OR SLEEVE (TYPICAL)

● EXTEND CONDUIT STUBOUT AS REQ. TO CONN. TO PNL. OR SWBD

DESIGNED	P. S. CHU	8-29-78 DATE
DRAWN	S. GRAYTON	8-20-78 DATE
CHECKED	H. B. ZACKRISON	8-16-80 DATE
APPROVED	H. B. ZACKRISON	8-16-80 DATE

REFERENCE DRAWINGS

NUMBER	DESCRIPTION

REVISIONS

DATE	BY	DESCRIPTION
7-15-83	HTN	1 REVISED PER PCO-78, AS-BUILD

3889-R — STATE OF MARYLAND

WASHINGTON METROPOLITAN AREA TRANSIT AUTHORITY

MATHEWS • CHATELAIN • BEALL
ENGINEERS AND ARCHITECTS
SECTION DESIGNER

SUBMITTED [signature] DATE 8-15-80

DE LEUW, CATHER & COMPANY
GENERAL ENGINEERING CONSULTANT

HARRY WEESE & ASSOCIATES
GENERAL ARCHITECTURAL CONSULTANT

APPROVED [signature]

ROCKVILLE ROUTE
BETHESDA STATION
AC POWER CONDUIT SCHEDULE

SCALE	DRAWING NO.	
NONE	FAII-E-157	M334-213

CONDUIT DESIG.	CONDUIT SIZE	CONDUIT TYPE	DWG. NO.	FROM	TO	FUNCTION	VOLTAGE	CONDUCTORS NO.	CONDUCTORS SIZE	REMARKS
B139s*	3/4"	GSR	E-25	MAP CASE & TEL. BOOTH	VOID SPACE - MEZZ	MAP CASE AND TEL. BOOTH LIGHTS				SLEEVE
B139			E-25	MAP CASE & TEL. BOOTH	RECEPTACLE IN CLEANER'S ROOM		120V	2	#12	VIA B139s* M/6
B140*	2"	GSR	E-32	BETHESDA T.P.S.S.	NORTH VENT SHAFT HIGH LEVEL	DRAIN CABLE (PIGTAILS)				
B140a			E-28	NORTH VENT SHAFT HIGH LEVEL	J.B. ADJACENT TO I.B. TRACK					SAME AS A11b BCOM146*
B140b			E-28	J.B. AT NORTH VENT SHAFT ADIT						
B141*			E-32	BETHESDA T.P.S.S.	NORTH VENT SHAFT HIGH LEVEL	FUTURE DRAIN CABLE				SAME AS A11b BCOM147*
B142*	3"	GSR	E-33, E-32	BETHESDA T.P.S.S.	STREET LEVEL	DRAIN CABLE				SAME AS A11b BCOM157*
B143*										SAME AS A11b BCOM158*
B144*										SAME AS A11b BCOM159*
B145*										SAME AS A11b BCOM160*
B147	3/4"	GSR	E-29, E,16	NORTH AC SWBD RM	ESS. LIGHTS IN NORTH VENT SHAFT ADIT	ESS. LIGHTS	277V	2	#12	NP/4
B148			E-16, E-30	SOUTH AC SWBD RM	LIGHTS IN ELM ST. VENT SHAFT ADIT	ESS. LIGHTS				SP/4
B150	3"	GSR	E-18	WIRE TROUGH IN R.A. PLENUM	WIRE TROUGH IN HUNG CEILING CAVITY - MEZZ	PLATFORM ESCALATOR MOTOR FDR				PART OF B74a
B151						PLATFORM ESCALATOR AUX SUPPLY				PART OF B76a
B152						PANEL "MP" FDR				PART OF B294b
B153						PANEL "HM" FDR				PART OF B84b
B154						PANEL "PEH" FDR				PART OF B295b
B155						SPARE	1	2/0 GND [1]		
B156										
B157					[2]	ELEVATOR CONTROL WIRING				UTILIZE CONDUIT EXTEND FROM TOP COLUMN TO 6" ABOVE FLOOR UNDER KIOSK

CONDUIT DESIG.	CONDUIT SIZE	CONDUIT TYPE	DWG. NO.	FROM	TO	FUNCTION	VOLTAGE	CONDUCTORS NO.	CONDUCTORS SIZE	REMARKS
B158s*	3"	GSR	E-26	ESCALATOR WAY MACH. RM	EXTERIOR GRADE	SPARE				SLEEVE
B159s*	3"	GSR	E-26			SPARE				SLEEVE
B160s*			E-26							SLEEVE
B161	1½"	GSR	E-19,14	PEPCO METERING PNL	HV SWGR INSTRUMENT CUBICLE IN SOUTH AC SWBD RM	PEPCO METERING				WIRING BY PEPCO
B162	3/4"	GSR	E-19,14		PNL "NPPL"		120V	2	#12	NPPL/11 ●
B200s*	3"	GSR	E-17,23	NORTH AC SWBD RM	NORTH MECH. RM - MEZZ					SLEEVE
B201s*	3"	GSR	E-17,23	NORTH AC SWBD RM	NORTH MECH. RM - MEZZ					
B202s*	3"	GSR	E-17,23	NORTH AC SWBD RM	NORTH MECH. RM - MEZZ	ESSENTIAL LTG. - NORTH ANCIL. RM - MEZZ				SLEEVE
B202							277V	2	#12	VIA B202s* NP/4
B203s*						RECEPTACLES IN NORTH ANCIL RM - MEZZ				SLEEVE
B203							208V	3	#12	VIA B203s* NPP/5,7
B204s*										SLEEVE [1]
										SLEEVE
B205s*	3"	GSR	E-17,23	NORTH AC SWBD RM	NORTH MECH. RM - MEZZ					SLEEVE [2]

AS BUILT CONDITION
BY: [illegible] SEP 13 1983
RESIDENT ENGINEER DATE

* DENOTES EXISTING CONDUIT OR SLEEVE (TYPICAL)

● EXTEND CONDUIT STUBOUT AS REQ. TO CONN. TO PNL. OR SWBD

DESIGNED	R S. CHU	8-20-79 DATE
DRAWN	G. GRAYTON	8-20-79 DATE
CHECKED	H. B. ZACKRISON	6-16-80 DATE
APPROVED	H. B. ZACKRISON	6-16-80 DATE

REFERENCE DRAWINGS

NUMBER	DESCRIPTION

REVISIONS

DATE	BY	DESCRIPTION
7-15-83	HTN	[1] REVISED PER PCO-10, AS-BUILT
-	-	[2] REVISED PER PCO-87, AS-BUILT

3880-R

WASHINGTON METROPOLITAN AREA TRANSIT AUTHORITY

MATHEWS • CHATELAIN • BEALL
ENGINEERS AND ARCHITECTS
SECTION DESIGNER

SUBMITTED [signature] DATE 8-15-80

DE LEUW, CATHER & COMPANY
GENERAL ENGINEERING CONSULTANT

HARRY WEESE & ASSOCIATES
GENERAL ARCHITECTURAL CONSULTANT

APPROVED [signature]

ROCKVILLE ROUTE
BETHESDA STATION
AC POWER CONDUIT SCHEDULE

SCALE: NONE
DRAWING NO. FAII-E-58
M334-214

CONDUIT DESIG.	CONDUIT SIZE	CONDUIT TYPE	DWG. NO.	FROM	TO	FUNCTION	VOLTAGE	CONDUCTORS NO.	CONDUCTORS SIZE	REMARKS
B206s*	3"	GSR	E-17,23 24	NORTH AC SWBD RM.	NORTH MECH. RM. - MEZZ.	PLATF. ELEVATOR EMER. SUPPLY				SLEEVE
B206	↓	↓	↓	↓	↓	↓	120V	2	#12	VIA B206s* NEL/3 [3]
B207s*	3"	GSR	E-17,23 24	NORTH AC SWBD RM.	NORTH MECH. RM. - MEZZ.	PLATF. ELEVATOR SHAFT LTG. & REC.				SLEEVE
B207	1" [1]	↓	↓	↓	↓	↓	208V	4	#12	VIA B207s* NPPL/8,10,12
B208s*	3"	GSR	E-17,23 24	NORTH AC SWBD RM.	NORTH MECH. RM. - MEZZ.	EMER. LIGHTS IN NORTH ANCIL. RM. - MEZZ.				SLEEVE
B208	1" [1]	GSR	E-17,23	NORTH AC SWBD RM.	NORTH MECH. RM. - MEZZ.	EMER. LIGHTS IN NORTH ANCIL. RM. - MEZZ.	277V	2	#12	VIA B208s* NEH/2
B209s*	3"	GSR	E-17,23 24	NORTH AC SWBD RM.	NORTH MECH. RM. - MEZZ.					SLEEVE
B210s*	3"	GSR	E-17,23 24	NORTH AC SWBD RM.	NORTH MECH. RM. - MEZZ.					SLEEVE
B211s*	3"	GSR	E-17,24	NORTH AC SWBD RM.	NORTH MECH. RM. - MEZZ.	PLATF. ELEVATOR MOTOR FEEDER				SLEEVE
B211	1 1/4" [2]	↓	↓	↓	↓	↓	480V	3 1	#6 #8 GND	VIA B211s* MP/13,15,17
B212s*	3"	GSR	E-17, 23 24	NORTH AC SWBD RM.	NORTH MECH. RM. - MEZZ.	FEEDER FOR MCCMN				SLEEVE [A/2]
B212	2½"	GSR	E-17,24	NORTH AC SWBD RM.	NORTH MECH. RM. - MEZZ.	FEEDER FOR MCCMN	480V	4 1	#3/0 #2 GND	VIA B212s* NORTH NON-ESSENTIAL SWBD ●
B213s*	3"	GSR	E-23	NORTH AC SWBD RM.	NORTH MECH. RM. - MEZZ.	SPARE				SLEEVE
B214s*	3"	GSR	E-23	NORTH AC SWBD RM.	NORTH MECH. RM. - MEZZ.	SPARE				SLEEVE
B215s*	1½"	GSR	E-23 E-126	NORTH MECH. RM. - MEZZ.	DOME SPACE	SPARE				SLEEVE
B216s*	1½"	GSR	E-23,24 E-126	NORTH MECH. RM. - MEZZ.	DOME SPACE	SPARE				SLEEVE
B217s*	1½"	GSR	E-23,24 E-126	NORTH MECH. RM. - MEZZ.	DOME SPACE	SPARE				SLEEVE
B218s*	1½"	GSR	E-23,24 E-126	SOUTH MECH. RM. - MEZZ.	DOME SPACE	SPARE				SLEEVE
B219s*	1½"	GSR	E-23,24 E-126	SOUTH MECH. RM. - MEZZ.	DOME SPACE	SPARE				SLEEVE
B220s*	3"	GSR	E-17,23 24	SOUTH MECH. RM. - MEZZ.	SOUTH STORAGE RM.	SPARE				SLEEVE
B221s*	3"	GSR	E-17,23 24	SOUTH MECH. RM. - MEZZ.	SOUTH STORAGE RM.	SPARE				SLEEVE
B222s*	3"	GSR	E-17,23 24	SOUTH MECH. RM. - MEZZ.	SOUTH STORAGE RM.	SPARE				SLEEVE
B223s*	3"	GSR	E-17,23 24	SOUTH MECH. RM. - MEZZ.	SOUTH STORAGE RM.	EMER. LIGHTS IN SOUTH ANCIL. RM. - MEZZ.				SLEEVE
B223	3"	GSR	E-17,23	SOUTH MECH. RM. - MEZZ.	SOUTH STORAGE RM.	EMER. LIGHTS IN SOUTH ANCIL. RM. - MEZZ.	277V	2	#12	VIA B223s*
B224s*	3"	GSR	E-17,23 24	SOUTH MECH. RM. - MEZZ.	SOUTH STORAGE RM.	SPARE				SLEEVE
B225s*	3"	GSR	E-17,23 24	SOUTH MECH. RM. - MEZZ.	SOUTH STORAGE RM.	SPARE				SLEEVE
B226s*	3"	GSR	E-17,23	SOUTH MECH. RM. - MEZZ.	SOUTH BATTERY RM.	SPARE				SLEEVE
B227s*	3"	GSR	E-17,23	SOUTH MECH. RM. - MEZZ.	SOUTH BATTERY RM.	SPARE				SLEEVE
B228s*	3"	GSR	E-17,23	SOUTH MECH. RM. - MEZZ.	SOUTH BATTERY RM.	SPARE				SLEEVE
B229s*	3"	GSR	E-17,23 24	SOUTH MECH. RM. - MEZZ.	SOUTH BATTERY RM.	RECEPTACLES IN SOUTH ANCIL. RM. - MEZZ.				SLEEVE [A/2]
B229	3"	GSR	E-17,23	SOUTH MECH. RM. - MEZZ.	SOUTH BATTERY RM.	RECEPTACLES IN SOUTH ANCIL. RM. - MEZZ.	208V	4	#12	VIA B229s* SPP/5,7,9
B230s*	3'	GSR	E-17,23 24	SOUTH MECH. RM. - MEZZ.	SOUTH BATTERY RM.	SPARE				SLEEVE
B231s*	3"	GSR	E-17,23 24	SOUTH MECH. RM. - MEZZ.	SOUTH BATTERY RM.	SPARE				SLEEVE
B232s*	3"	GSR	E-17,23 24	SOUTH MECH. RM - MEZZ	SOUTH AC SWBD RM	COMMUNICATION ROOM FEEDER				SLEEVE
B232	3/4"	↓	↓	↓	↓	↓	480V	3 1	#10 #10 GND	VIA B232s* SEH/13 [A/2]
B233s*	3"	↓	↓	↓	↓	SPARE				SLEEVE
B234s*	3"	GSR	E-17,23 24	SOUTH MECH. RM - MEZZ	SOUTH AC SWBD RM	FEEDER FOR MCCMS				SLEEVE
B234	↓	↓	↓	↓	↓	↓	480V	4 1	#300 MCM #2 GND.	VIA B234s* SOUTH NON-ESS. SWBD ● [A/2]
B235s*	↓	↓	↓	↓	SOUTH MECH. RM - MEZZ	SOUTH AC SWBD RM	FOR #1 FOR TRAIN CONTROL ROOM			SLEEVE
B235	↓	↓	↓	↓	DISCONNECT SWITCH IN TRAIN CONTROL ROOM	TRANSFORMER IN SOUTH A.C. SWBD. ROOM				VIA B235s* SOUTH NON-ESS. SWBD ●
B236s*	↓	↓	↓	↓	SOUTH MECH. ROOM - MEZZ.	SOUTH A.C. SWBD. ROOM	FDR #2 FOR TRAIN CONTROL ROOM			SLEEVE
B236	↓	↓	↓	↓	DISCONNECT SWITCH IN TRAIN CONTROL ROOM	TRANFORMER IN SOUTH A.C. SWBD. ROOM	↓	208V	4 1	#4 #8GND	VIA B236s* CONT'D OF B83s*

AS-BUILT CONDITION
SEP 1 ... DATE

* DENOTES EXISTING CONDUIT OR SLEEVE (TYPICAL)

● EXTEND CONDUIT STUBOUT AS REQ. TO CONN. TO PNL. OR SWBD

DESIGNED	R S. CHU	6-23-79 DATE
DRAWN	G. GRAYTON	2-20-79 DATE
CHECKED	H. B. ZACKRISON	6-16-80 DATE
APPROVED	H. B. ZACKRISON	6-16-80 DATE

REFERENCE DRAWINGS

NUMBER	DESCRIPTION

REVISIONS

DATE	BY	DESCRIPTION
9-25-80	H.Z.	GENERAL REVISION [A/2]
7-15-83	HTN	[1] REVISED PER PCO-78, AS-BUILT
—	—	[2] REVISED PER PCO-79, AS-BUILT
—	—	[3] REVISED PER FIELD CONDITION, AS BUILT

3889-R STATE OF MARYLAND

WASHINGTON METROPOLITAN AREA TRANSIT AUTHORITY

MATHEWS • CHATELAIN • BEALL
ENGINEERS AND ARCHITECTS
SECTION DESIGNER

SUBMITTED [signature] DATE 8-15-80

DE LEUW, CATHER & COMPANY
GENERAL ENGINEERING CONSULTANT ■

HARRY WEESE & ASSOCIATES
GENERAL ARCHITECTURAL CONSULTANT □

APPROVED [signature]

ROCKVILLE ROUTE
BETHESDA STATION
AC POWER CONDUIT SCHEDULE

SCALE	DRAWING NO.	
NONE	FAII-E-158	M334-215

CONDUIT DESIG.	CONDUIT SIZE	CONDUIT TYPE	DWG. NO.	FROM	TO	FUNCTION	VOLTAGE	CONDUCTORS NO.	CONDUCTORS SIZE	REMARKS
B237s*	3"	GSR	E-16,23, 24	SOUTH MECH. RM - MEZZ	SOUTH AC SWBD RM	FEEDER FOR CONDENSING UNIT #1				SLEEVE
B237.	3/4"	↓	E-17,24 31	↓	ELM STREET VENT SHAFT ADIT	↓	208V	3 1	#10 #10 GND.	VIA B237s* SM/1
B240s*	3"	GSR	E-127, 32,33	BETHESDA T.P.S.S. UPPER LEVEL	BETHESDA T.P.S.S. LOWER LEVEL	GROUND BUS FLEXIBLE CONNECTOR				SLEEVE
B241s*	3"	GSR	E-32,33	BETHESDA T.P.S.S. UPPER LEVEL	BETHESDA T.P.S.S. LOWER LEVEL	~~FEEDER TO CHILLER #1 STANDBY~~				SLEEVE
~~B241~~	↓	↓	~~E-127,32 33~~	~~CHILLER PLANT~~	↓	↓	~~480V~~	~~3 1~~	~~300 MCM #2 GND~~	~~VIA B241s* ONE OF TWO FEEDER CONDUITS, SEE B242~~
B242s*	3"	GSR	E-32,33	BETHESDA T.P.S.S. UPPER LEVEL	BETHESDA T.P.S.S LOWER LEVEL	SPARE				SLEEVE
~~B242~~	↓	↓	~~E-127,32 33~~	~~CHILLER PLANT~~	↓	↓	~~480V~~	~~3 1~~	~~300 MCM #2 GND~~	~~VIA B242s* ONE OF TWO FEEDER CONDUITS, SEE B241~~
B243s*	6"	GSR	E-32,33	BETHESDA T.P.S.S. UPPER LEVEL	BETHESDA T.P.S.S. LOWER LEVEL	FUTURE TRANSFORMER CABLE	13KV			SLEEVE
B244s*	6"	GSR	E-32,33	BETHESDA T.P.S.S. UPPER LEVEL	BETHESDA T.P.S.S. LOWER LEVEL	FUTURE TRANSFROMER CABLE	13KV			SLEEVE
B245s*	6"	GSR	E-32,33	BETHESDA T.P.S.S. UPPER LEVEL	BETHESDA T.P.S.S. LOWER LEVEL	FUTURE TRANSFORMER CABLE	13KV			SLEEVE
B246s*	6"	GSR	E-32,33	BETHESDA T.P.S.S. UPPER LEVEL	BETHESDA T.P.S.S. LOWER LEVEL	FUTURE TRANSFORMER CABLE	13KV			SLEEVE
B247s*	3"	GSR	E-32,33	BETHESDA T.P.S.S. UPPER LEVEL	BETHESDA T.P.S.S. LOWER LEVEL	SPARE				SLEEVE
B248s*	3"	GSR	E-32,33	BETHESDA T.P.S.S. UPPER LEVEL	BETHESDA T.P.S.S. LOWER LEVEL	RECEPTACLES				SLEEVE
B249s*	3"	GSR	E-32,33	BETHESDA T.P.S.S. UPPER LEVEL	BETHESDA T.P.S.S. LOWER LEVEL	~~FEEDER TO MCC CH~~				SLEEVE
~~B249~~	↓	↓	~~E-127,32 33~~	~~CHILLER PLANT~~	↓	↓	~~480V~~	~~4 3~~	~~400 MCM #3 GND~~	~~VIA B249s*~~
B250s*	3"	GSR	E-32,33	BETHESDA T.P.S.S. UPPER LEVEL	BETHESDA T.P.S.S. LOWER LEVEL	SPARE				SLEEVE
B251s*	3"	GSR	E-32,33	BETHESDA T.P.S.S. UPPER LEVEL	BETHESDA T.P.S.S. LOWER LEVEL	SPARE				SLEEVE
B252s*	3"	GSR	E-32,33	BETHESDA T.P.S.S. UPPER LEVEL	BETHESDA T.P.S.S. LOWER LEVEL	EMER LTG.				SLEEVE
B253s*	3"	GSR	E-32,33 127	BETHESDA T.P.S.S. UPPER LEVEL	BETHESDA T.P.S.S. LOWER LEVEL	GROUND BUS FLEXIBLE CONNECTOR				SLEEVE
B254s*	3"	GSR	E-32,33	BETHESDA T.P.S.S. UPPER LEVEL	BETHESDA T.P.S.S. LOWER LEVEL	SPARE				SLEEVE
B255s*	3"	GSR	E-32,33	BETHESDA T.P.S.S. UPPER LEVEL	BETHESDA T.P.S.S. LOWER LEVEL	SPARE				SLEEVE
B256s*	3"	GSR	E-32,33	BETHESDA T.P.S.S. LOWER LEVEL	BETHESDA T.P.S.S. UPPER LEVEL	ESSENTIAL LTG.				SLEEVE
B257s*	3"	GSR	E-32,33	BETHESDA T.P.S.S. LOWER LEVEL	BETHESDA T.P.S.S. UPPER LEVEL	SPARE				SLEEVE
B258s*	3"	GSR	E-32,33	BETHESDA T.P.S.S. LOWER LEVEL	BETHESDA T.P.S.S. UPPER LEVEL	SPARE				SLEEVE
B259s*	3"	GSR	E-32,33	BETHESDA T.P.S.S. LOWER LEVEL	BETHESDA T.P.S.S. UPPER LEVEL	SPARE				SLEEVE
B260s*	3"	GSR	E-32,33	BETHESDA T.P.S.S. LOWER LEVEL	BETHESDA T.P.S.S. UPPER LEVEL	SPARE				SLEEVE
B261s*	3"	GSR	E-32,33	BETHESDA T.P.S.S. LOWER LEVEL	BETHESDA T.P.S.S. UPPER LEVEL	SPARE				SLEEVE
B262s*	1"	GSR	E-32,33	BETHESDA T.P.S.S. LOWER LEVEL	CHILLER PLANT	FD				SLEEVE
B263s*	1"	GSR	E-32,33	BETHESDA T.P.S.S. LOWER LEVEL	CHILLER PLANT	IA				SLEEVE
B264s*	1"	GSR	E-32,33	BETHESDA T.P.S.S. LOWER LEVEL	CHILLER PLANT	PABX TEL				SLEEVE
B265s*	2"	GSR	E-32,33	BETHESDA T.P.S.S. LOWER LEVEL	CHILLER PLANT	DTS				SLEEVE
B266s*	2"	GSR	E-25	HUNG CEILING - PASSAGEWAY	CLEANER'S ROOM PASSAGEWAY	ESS LTG	480V	4	#12	SLEEVE THRU WALL
B267s*	2"	GSR	E-25	HUNG CEILING - PASSAGEWAY	CLEANER'S ROOM PASSAGEWAY	EMER LTG	277V	2	#12	SLEEVE THRU WALL
B268s*	2"	GSR	E-25	HUNG CEILING - PASSAGEWAY	CLEANER'S ROOM PASSAGEWAY	SPARE				SLEEVE THRU WALL
B269s*	2"	GSR	E-25	HUNG CEILING - PASSAGEWAY	CLEANER'S ROOM PASSAGEWAY	SPARE				SLEEVE THRU WALL
B270s*	2"	GSR	E-25	HUNG CEILING - PASSAGEWAY	CLEANER'S ROOM PASSAGEWAY	SPARE				SLEEVE THRU WALL

AS BUILT CONDITION

BY ____ REASON CHANGED ____ DATE ____

* DENOTES EXISTING CONDUIT OR SLEEVE (TYPICAL)

● EXTEND CONDUIT STUBOUT AS REQ. TO CONN. TO PNL. OR SNBD

DESIGNED P.S. CHU 8-25-79 DATE
DRAWN G. GRAYTON 8-20-79 DATE
CHECKED H. B. ZACKRISON 8-15-80 DATE
APPROVED H. B. ZACKRISON 8-15-80 DATE

REFERENCE DRAWINGS

NUMBER	DESCRIPTION

REVISIONS

DATE	BY	DESCRIPTION
9-25-80	H.Z.	GENERAL REVISIONS
7-15-83	HTN	1 REVISED PER PCO-56 & PCO56 REV1, ASBUILT

3889-R

WASHINGTON METROPOLITAN AREA TRANSIT AUTHORITY

MATHEWS • CHATELAIN • BEALL
ENGINEERS AND ARCHITECTS
SECTION DESIGNER

SUBMITTED ____ DATE 8-15-80

DE LEUW, CATHER & COMPANY
GENERAL ENGINEERING CONSULTANT

HARRY WEESE & ASSOCIATES
GENERAL ARCHITECTURAL CONSULTANT

APPROVED ____

ROCKVILLE ROUTE
BETHESDA STATION
AC POWER CONDUIT SCHEDULE

SCALE NONE | DRAWING NO. FAII-E-59 | M334-216

CONDUIT DESIG.	CONDUIT SIZE	CONDUIT TYPE	DWG. NO.	FROM	TO	FUNCTION	VOLTAGE	CONDUCTORS NO.	CONDUCTORS SIZE	REMARKS
B271s*	2"	GSR	E-25	HUNG CEILING PASSAGEWAY	CLEANER'S ROOM PASSAGEWAY	SPARE				SLEEVE THRU WALL
B272*	1"	GSR	E-25, E-126	MEZZ. INTERFACE	CLEANER'S ROOM PASSAGEWAY	SPARE		1	2/0 GND	1
B273*	↓	↓	E-25 E-126	MEZZ. INTERFACE	CLEANER'S ROOM PASSAGEWAY	SPARE				
B275*	4"	GSR	E-25	ANCIL ROOM PASSAGEWAY	ESCALATOR LOWER PIT	FUTURE FACILITIES				
B276s*	4"	GSR	E-25, E-13	CLEANER'S ROOM PASSAGEWAY	MECH. RM - ATTIC LEVEL	RECEPTACLES				SLEEVE
B277s*	4"	GSR	E-25, E-13	CLEANER'S ROOM PASSAGEWAY	MECH. RM - ATTIC LEVEL	PANEL "MP" FEEDER				SLEEVE
B277	21/2"		E-25 E-13	↓	↓	↓	480V	4 1	#2 #6 GND.	NORTH NON-ESS. BUS CONT'D OF B294* VIA B277s*
B278s*	4"		E-25, E-13	↓	↓					SLEEVE
B279s*	4"	GSR	E-25, E-127	CLEANER'S ROOM PASSAGEWAY	MEZZ RM ATTIC LEVEL					SLEEVE
B280s*	4"	GSR	E-25, E-137	CLEANER'S ROOM PASSAGEWAY	MEZZ RM ATTIC LEVEL					SLEEVE
B281s*	4"	GSR	E-25, E-13	CLEANER'S ROOM PASSAGEWAY	MEZZ RM ATTIC LEVEL	EMERG LIGHTS				SLEEVE
B281	1"	↓	↓	↓	↓	↓	277V	2	#12	VIA B281s* PEH/2
B282s*	4"	↓	↓	↓	↓					SLEEVE
B283s*	4"	GSR	E-25, E-13	CLEANER'S ROOM PASSAGEWAY	MEZZ RM ATTIC LEVEL					SLEEVE
B284s*	4"	GSR	E-25, E-13	CLEANER'S ROOM PASSAGEWAY	MEZZ RM ATTIC LEVEL	ESSENTIAL LIGHTS				SLEEVE
B284	1"	↓	↓	↓	↓	↓	277V	2	#12	VIA 284s* HM/14
B285s	3"	GSR	E-26,33	NORTH VENT SHAFT UPPER STRUCTURE	EXTERIOR BELOW GRADE	EXTERIOR PYLON LIGHTING				SLEEVE
B285	3/4"	↓	E-26,28 33	↓	↓	↓	277V	2 1	#10 #10 GND	VIA B285s OLH/7
B286s	3"	↓	E-33	↓	↓	SPARE				SLEEVE
B287s	3"	GSR	E-33	NORTH VENT SHAFT UPPER STRUCTURE	EXTERIOR BELOW GRADE	SPARE				SLEEVE
B288s	3"	PVC	E-127	T.P.S.S.	CHILLER PLANT	GROUND BUS FLEXIBLE CONNECTOR				SLEEVE
B289	1"	GSR	E-17,24	TRAIN CONTROL ROOM	SOUTH A.C. SWITCHBOARD ROOM	GROUND CONDUCTOR		1	#2/0	VIA B233s*

CONDUIT DESIG.	CONDUIT SIZE	CONDUIT TYPE	DWG. NO.	FROM	TO	FUNCTION	VOLTAGE	CONDUCTORS NO.	CONDUCTORS SIZE	REMARKS
B292*	1½"	GSR	E-25,22 E-126	CLEANER'S RM. - PASSAGEWAY	MEZZ. INTERFACE	EMER. FDR - KIOSK	208V	4 1	#10 #10 GND	PEL/1,3,5 ●
B292a	1½"	GSR	E-22	MEZZ. INTERFACE	KIOSK	↓	↓	↓	↓	↓
B293*	1"	GSR	E-25	CLEANER'S RM. - PASSAGEWAY	MEZZ. INTERFACE	SPARE		1	2/0 GND	1
B293a	1"	GSR	E-22	MEZZ. INTERFACE	KIOSK	↓		1	2/0 GND	1
B294*	2"	GSR	E-25 E-126	CLEANER'S RM. - PASSAGEWAY	MEZZ. INTERFACE	PNL "MP" FDR	480V	4 1	#2 #6 GND	FOR CONTINUATION SEE B277 ●
B294b	2"	GSR	E-22	WIRE TROUGH IN HUNG CEILING - MEZZ.	NORTH R.A. PLENUM	↓	↓	↓	↓	VIA B152
B294a*	2"	GSR	E-17 E-126	NORTH R.A. PLENUM	NORTH AC SWBD RM.	↓	↓	↓	↓	NORTH NON-ESSENTIAL BUS ● 2
	PROVIDE	SURFACE	MOUNTED	CONDUITS 2						
B295*	2"	GSR	E-25 E-126	CLEANER'S RM. - PASSAGEWAY	MEZZ. INTERFACE	PNL "PEH" FDR	480V	4 1		VIA B154 NEH/14
B295b	2"	GSR	E-22	WIRE TROUGH IN HUNG CEILING - MEZZ.	NORTH R.A. PLENUM	↓	↓	↓		↓
B295a*	2"	GSR	↓	NORTH R.A. PLENUM	NORTH AC SWBD RM.	↓	↓	↓		● 2
	PROVIDE	SURFACE	MOUNTED	CONDUITS 2						
B300	1"	GSR	E-16	480V SWBD. NORTH AC SWBD RM.	PANEL "NDC"	480V SWBD. DC CONTROL POWER				
B301	1½"	↓	↓	↓	↓	480V SWBD. RELAY/ GFP D.C. POWER				
B302	1"	↓	↓	↓	PANEL "NPP"	HV SWITCHGEAR SPACE HEATER	120V	2	#12	NPP/12
B303	2"	↓	↓	SOUTH A.C. SWGR.	D.T.S. CABINET	TRANSFORMER OVER-TEMP MONITOR				
B304	↓	↓	↓	NORTH A.C. SWGR.	↓	↓				
B305	↓	↓	↓	NORTH 480V SWBD.	↓	SEC. MAIN BREAKER MONITOR				
B306	1"	GSR	E-16	NORTH 480V SWBD.	PANEL "NPP"	480V SWBD SPACE HEATER	120V	2	#12	NPP/14
B307	2"	↓	↓	SOUTH 480V SWBD.	D.T.S. CABINET	SEC. MAIN BREAKER MONITOR				
B308	1"	GSR	E-16	↓	PANEL "SDC"	480V SWBD. DC CONTROL POWER				
B309	1½"	↓	↓	↓	↓	480V SWBD RELAY/ GFP D.C. POWER				
B310	1"	↓	↓	↓	PANEL "SPP"	HV SWGR SPACE HEATER	120V	2	#12	SPP/6
B311	↓	↓	↓	↓	D.T.S. CABINET	SEC. TIE BREAKER MONITOR				
B312	↓	↓	↓	NORTH 480V SWBD.	↓	↓				
B313	↓	↓	↓	SOUTH BATT. RM. FAN	↓	FAN MONITOR				
B314	1"	GSR	E-16	480V SWBD. IN SOUTH A.C. SWBD. ROOM	PANEL "SPP"	480V SWBD SPACE HEATER	120V	2	#12	SPP/8
B315	2"	↓	↓	NORTH. BATT. RM. FAN	D.T.S. CABINET	FAN MONITOR				
B316	↓	↓	↓	UPS IN N. A.C. SWBD. RM.	↓	UPS MONITOR				
B317	↓	↓	↓	UPS IN S. A.C. SWBD. RM.	↓	↓				
B318	↓	↓	↓	FLASHER & DIMMER CONTROL UNIT (NORTH)	↓	FLASHER & DIMMER MONITOR				
B319	↓	↓	↓	FLASHER & DIMMER CONTROL UNIT (SOUTH)	↓	↓				

AS BUILT CONDITION
SEP 1983
REVISION CHECKED DATE

STATE OF MARYLAND — HENRY J. SCHMIDT, JR. — REGISTERED PROFESSIONAL ENGINEER

* DENOTES EXISTING CONDUIT OR SLEEVE (TYPICAL)

● EXTEND CONDUIT STUBOUT AS REQ. TO CONN. TO PNL. OR SWBD

		DATE
DESIGNED	R.S. CHU	6-23-78
DRAWN	G. GRAYTON	8-20-78
CHECKED	H. B. ZACKRISON	6-16-80
APPROVED	H. B. ZACKRISON	6-16-80

REFERENCE DRAWINGS

NUMBER	DESCRIPTION

REVISIONS

DATE	BY	DESCRIPTION
9-25-80	H.Z.	ADDED B288s & B289, REVISED CKTS.
7-18-83	HTN	1 KIOSK CONDUIT REVISED PER PCO-10, AS BUILT
—	—	2 REV. CONDUITS FROM SWITCHBOARD TO PLENUM PER PCO-36, AS BUILT

3889-R

WASHINGTON METROPOLITAN AREA TRANSIT AUTHORITY

MATHEWS • CHATELAIN • BEALL
ENGINEERS AND ARCHITECTS
SECTION DESIGNER

SUBMITTED Jerry R. Grove DATE 8-15-80

DE LEUW, CATHER & COMPANY
GENERAL ENGINEERING CONSULTANT

HARRY WEESE & ASSOCIATES
GENERAL ARCHITECTURAL CONSULTANT

APPROVED

ROCKVILLE ROUTE
BETHESDA STATION
AC POWER CONDUIT SCHEDULE

SCALE: NONE
DRAWING NO. FAII-E-159
M334-217

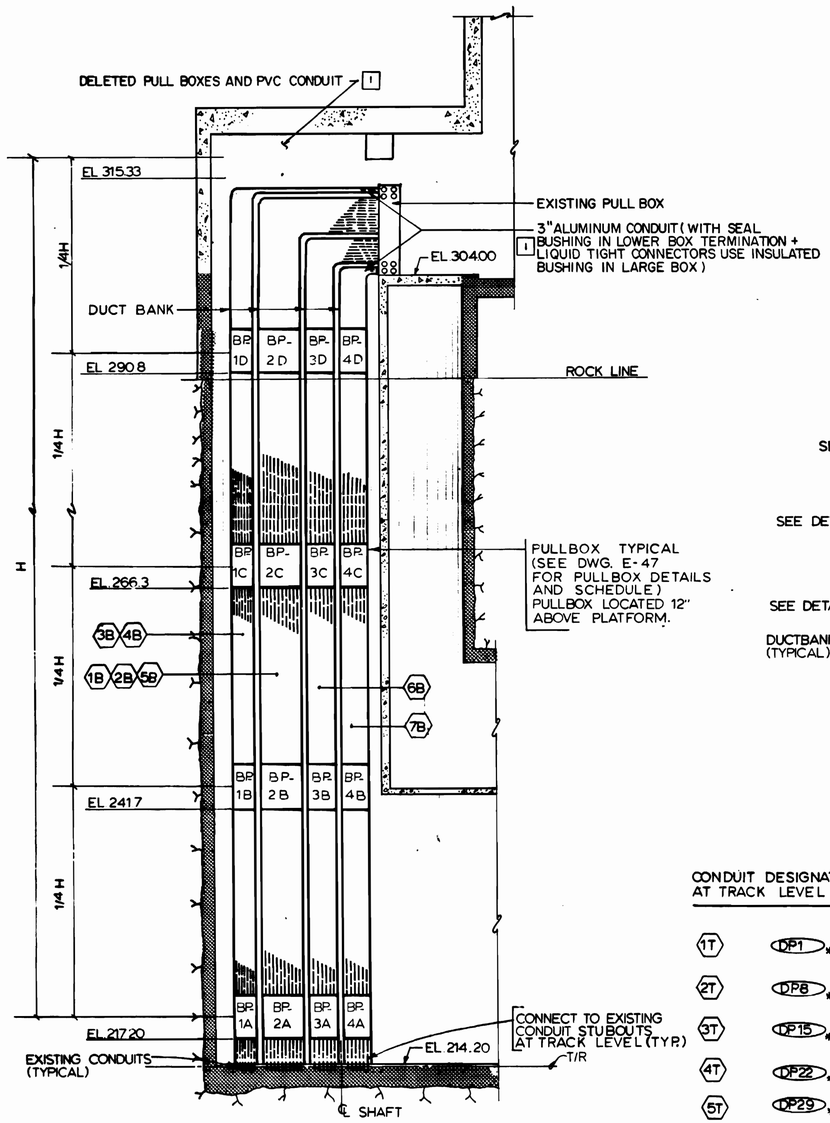

SECTION E-E

SCALE: 1/8" = 1'-0"
(E-28,60)

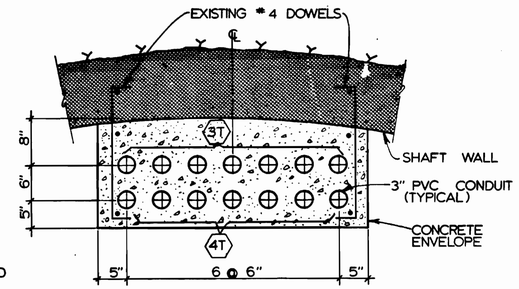

DETAIL 1

SCALE: 1" = 1'-0"

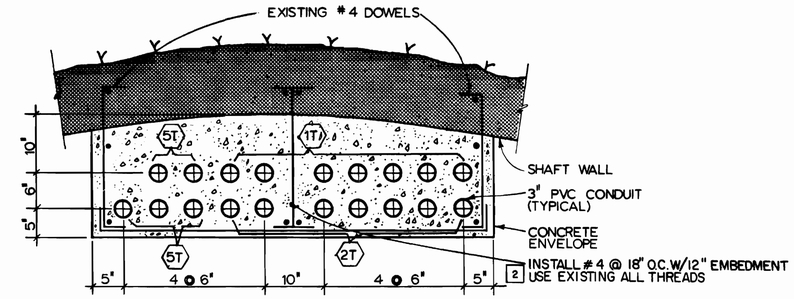

DETAIL 2

SCALE: 1" = 1'-0"

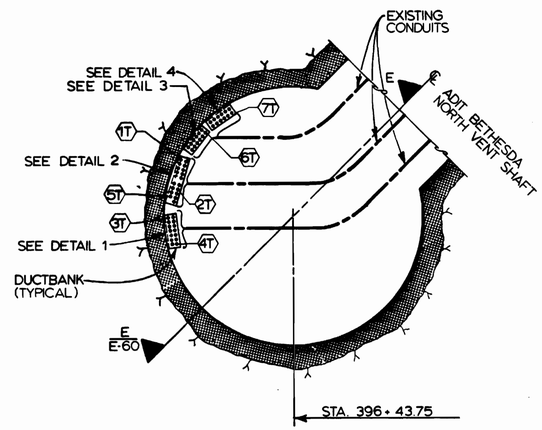

PARTIAL PLAN

SCALE: 1/8" = 1'-0"
(E-28,32)

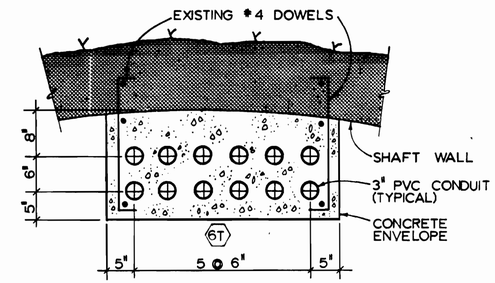

DETAIL 3

SCALE: 1" = 1'-0"

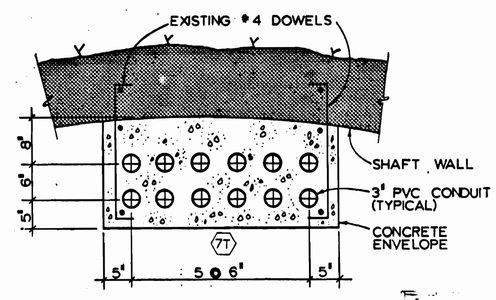

DETAIL 4

SCALE: 1" = 1'-0"

CONDUIT DESIGNATIONS AT TRACK LEVEL

1T	DP1*	THRU	DP7*
2T	DP8*	THRU	DP14*
3T	DP15*	THRU	DP21*
4T	DP22*	THRU	DP28*
5T	DP29*	THRU	DP33*
6T	DN1*	THRU	DN12*
7T	DN13*	THRU	DN24*

CONDUIT DESIGNATIONS WITHIN DUCTBANKS

1B	DP1b	THRU	DP7b
2B	DP8b	THRU	DP14b
3B	DP15b	THRU	DP21b
4B	DP22b	THRU	DP28b
5B	DP29b	THRU	DP33b
6B	DN1b	THRU	DN12b
7B	DN13b	THRU	DN24b

DESIGNED	P.S. CHU	2-19-75 DATE
DRAWN	C.J. REID	2-19-75 DATE
CHECKED	H.B. ZACKRISON	6-16-80 DATE
APPROVED	H.B. ZACKRISON	6-16-80 DATE

REFERENCE DRAWINGS

NUMBER	DESCRIPTION
E-28	N VENT SHAFT PLAN - LTG. & PWR.

REVISIONS

DATE	BY	DESCRIPTION
7-19-83	HTN	1 DUCT BANK INTERFACES AT NORTH AND ELM ST. VENTS SHAFT PER PCO-30, AS BUILT
-	-	2 INSTALL REBAR DOWELS PER PCO-63,

STATE OF MARYLAND

WASHINGTON METROPOLITAN AREA TRANSIT AUTHORITY

MATHEWS • CHATELAIN • BEALL
ENGINEERS AND ARCHITECTS
SECTION DESIGNER

SUBMITTED Jerilyn G. Fress DATE 8-15-80

DE LEUW, CATHER & COMPANY
GENERAL ENGINEERING CONSULTANT

HARRY WEESE & ASSOCIATES
GENERAL ARCHITECTURAL CONSULTANT

APPROVED

ROCKVILLE ROUTE
BETHESDA STATION
NORTH VENT SHAFT DUCT BANK DETAILS

SCALE: AS NOTED

DRAWING NO. FA11-E-60

M334-218

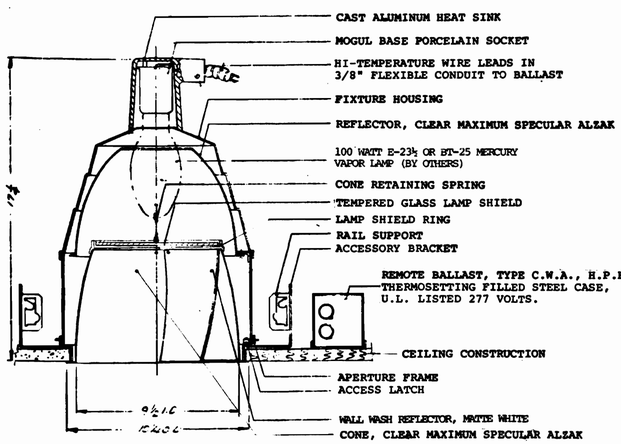

FIXTURE TYPE "S3"
NOT TO SCALE

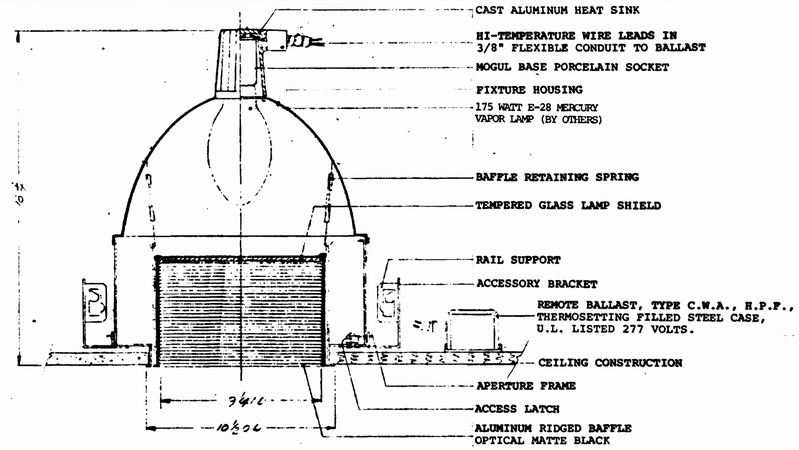

FIXTURE TYPE "S7"
NOT TO SCALE

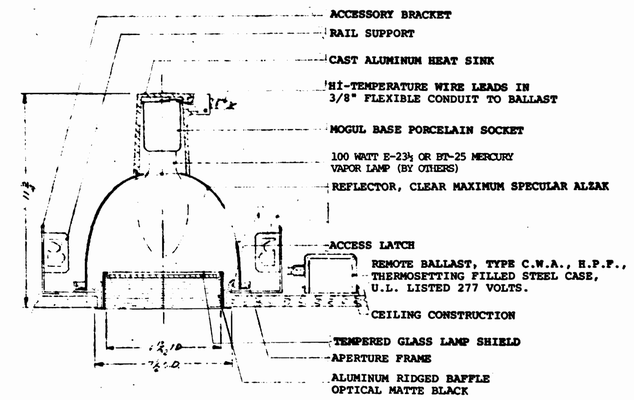

FIXTURE TYPE "S7A"
NOT TO SCALE

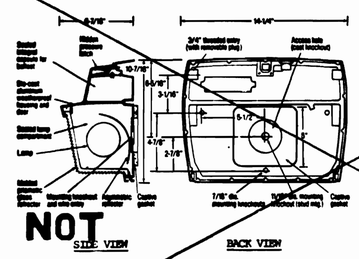

NOTES:

1. BALLASTS SHALL BE INTEGRAL TYPE C.W.A. H.P.F., U.L. LISTED, 277 VOLTS.
2. LAMPS SHALL BE:
   TYPE S16 - 175 WATT, E-28 MERCURY VAPOR.
   TYPE S14 - 100 WATT, E-23½ MERC. VAPOR.
3. FIXTURES SHALL COME SUPPLIED WITH ALUMINUM CAST LENS GUARD AND TAMPER-PROOF HARDWARE.

NOT USED

FIXTURE TYPES "S16" & "S14"
NOT TO SCALE

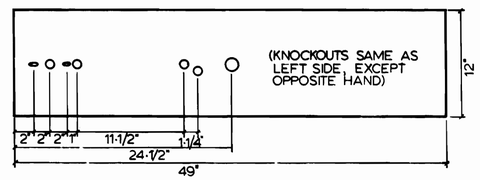

NOTES:

1. HEAVY-GAUGE STEEL BODY, PHOSPHATIZED AND FINISHED IN ACRYLIC WHITE ENAMEL.
2. INJECTION-MOLDED PRISMATIC LENS, 100% VIRGIN ACRYLIC PLASTIC.
3. USES TWO F40 FLUORESCENT LAMPS.
4. H.P.F. CBM/ETL BALLAST, RATED 277 V.

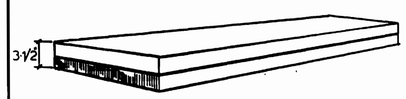

FIXTURE TYPE "S15"
NOT TO SCALE

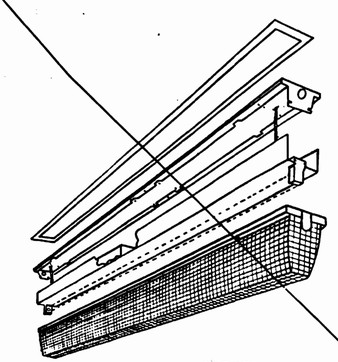

NOTES:

1. 16 GAUGE COLD-ROLLED STEEL BODY, FINISHED IN BAKED WHITE ENAMEL.
2. INJECTION-MOLDED CLEAR PRISMATIC POLYCARBONATE LENS. FIXTURE SHALL COME SUPPLIED WITH WEATHERTIGHT GASKETING AND TAMPER-PROOF HARDWARE.
3. USES A SINGLE F40 FLUORESCENT LAMP.
4. BALLAST SHALL BE H.P.F., CBM/ETL, RATED 277 VOLTS.

NOT USED

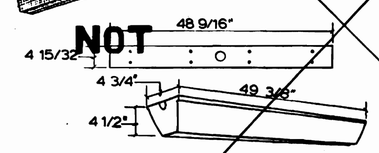

FIXTURE TYPE "5A"
NOT TO SCALE

WASHINGTON METROPOLITAN AREA TRANSIT AUTHORITY
AS BUILT CONDITION
BY
DATE

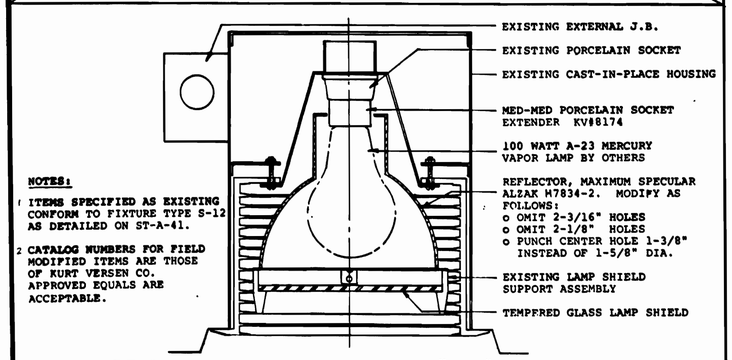

NOTES:

1. ITEMS SPECIFIED AS EXISTING CONFORM TO FIXTURE TYPE S-12 AS DETAILED ON ST-A-41.
2. CATALOG NUMBERS FOR FIELD MODIFIED ITEMS ARE THOSE OF KURT VERSEN CO. APPROVED EQUALS ARE ACCEPTABLE.

FIELD-MODIFIED FIXTURE TYPE "S12"
NOT TO SCALE

DESIGNED	H.B. ZACKRISON	9-10-78 DATE
DRAWN	B. STAUFFER	10-16-78 DATE
CHECKED	H.B. ZACKRISON	6-16-80 DATE
APPROVED	H.B. ZACKRISON	6-16-80 DATE

REFERENCE DRAWINGS

NUMBER	DESCRIPTION

REVISIONS

DATE	BY	DESCRIPTION
9-25-80	H.Z.	DELETED FIXT. TYPES 'S16' & 'S14'

3889-R

STATE OF MARYLAND

WASHINGTON METROPOLITAN AREA TRANSIT AUTHORITY

MATHEWS • CHATELAIN • BEALL
ENGINEERS AND ARCHITECTS
SECTION DESIGNER
SUBMITTED [signature] DATE 8-15-80

DE LEUW, CATHER & COMPANY
GENERAL ENGINEERING CONSULTANT ■

HARRY WEESE & ASSOCIATES
GENERAL ARCHITECTURAL CONSULTANT □
APPROVED [signature]

ROCKVILLE ROUTE
BETHESDA STATION
LIGHTING FIXTURE DETAILS

SCALE	DRAWING NO.	
NONE	FAII-E-61	M334-219

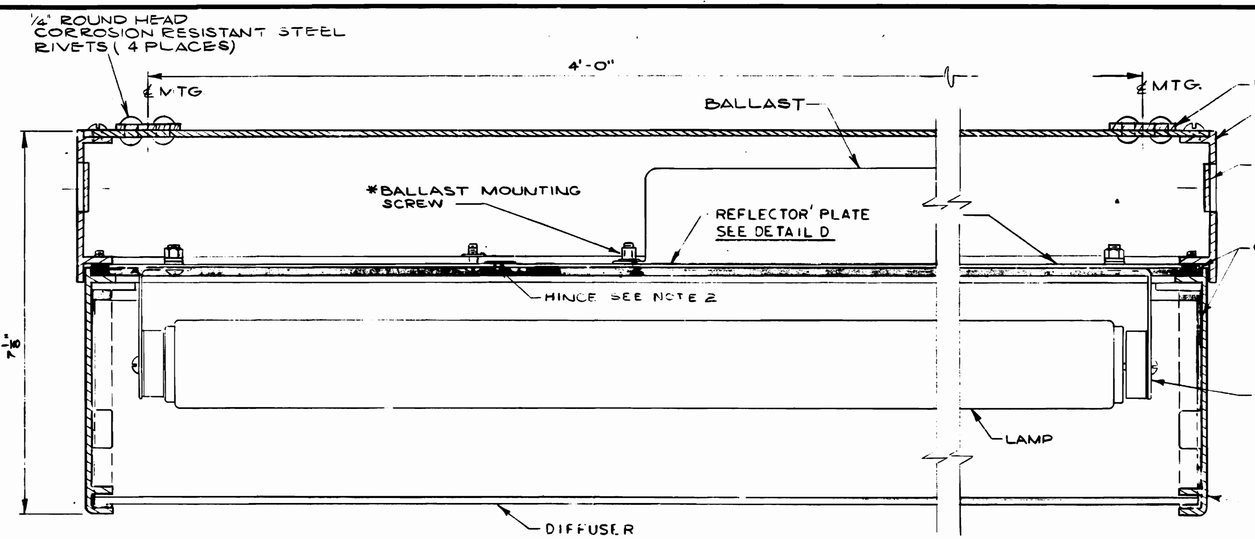

SECTION A–A

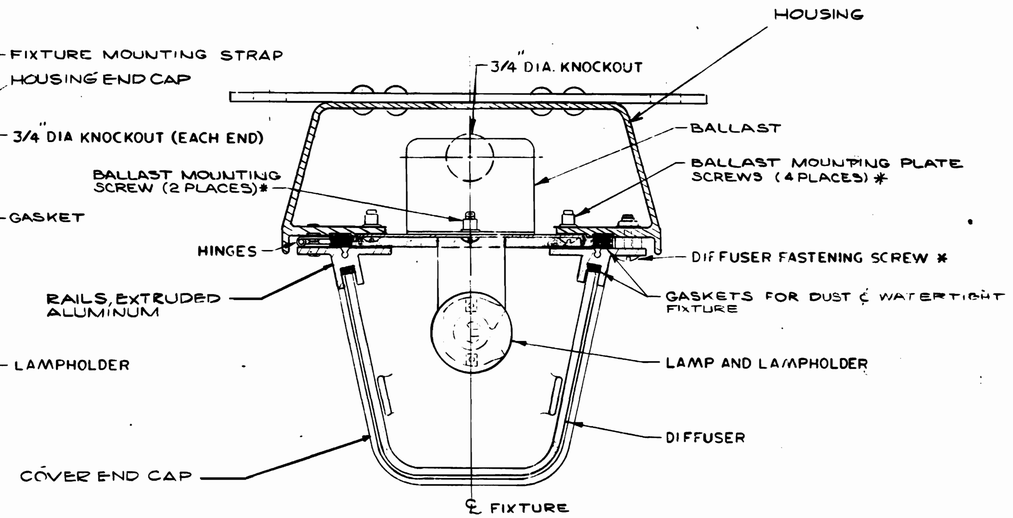

SECTION B–B

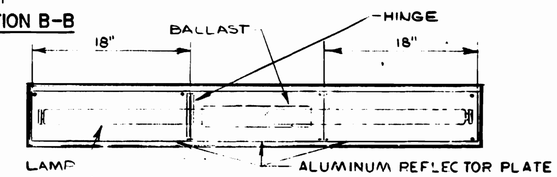

DETAIL D
SCALE: NONE

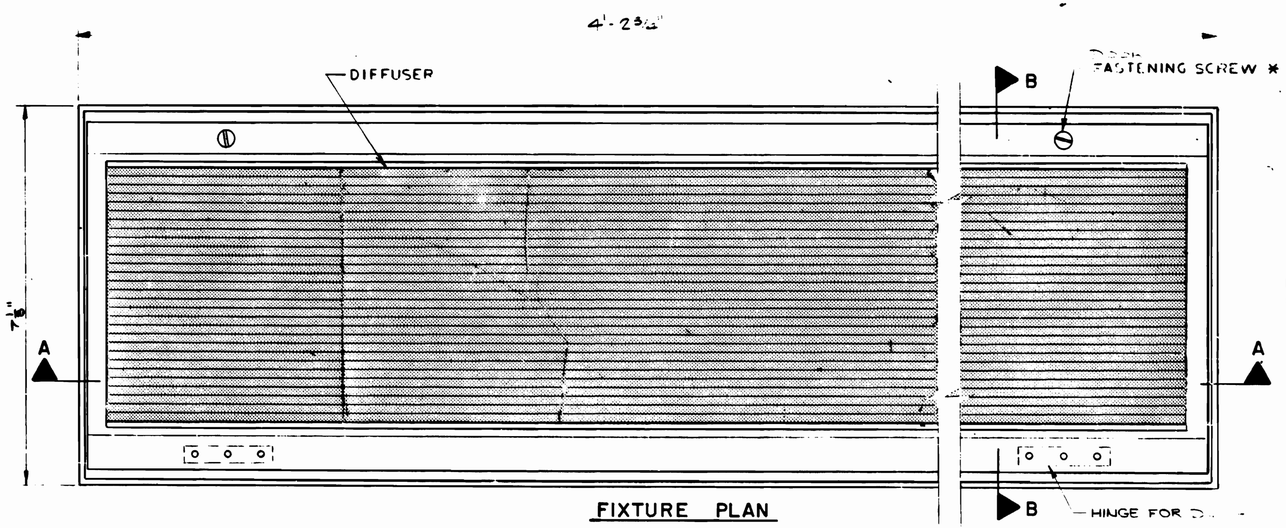

FIXTURE PLAN

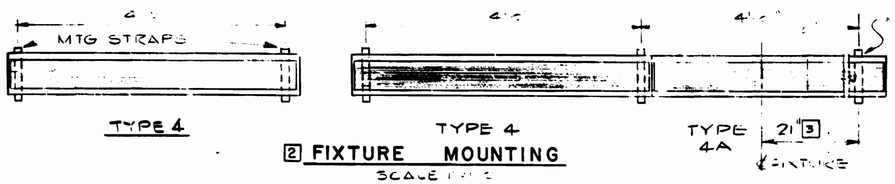

2 FIXTURE MOUNTING
SCALE NONE

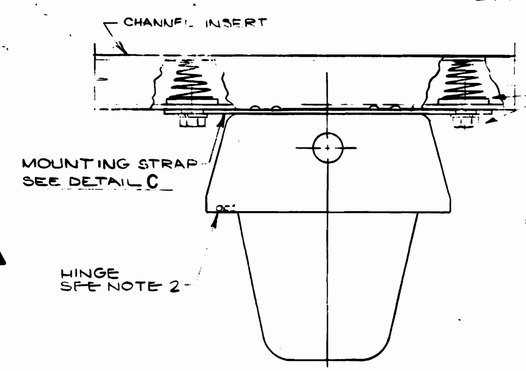

MOUNTING DETAIL
SCALE NONE

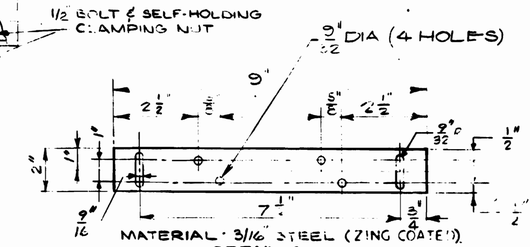

DETAIL C
MOUNTING STRAP 4
SCALE NONE

NOTES

1 * INDICATES SLOTTED PAN HEAD CAPTIVE SCREW

2 INSTALL WALL MOUNTED FIXTURES WITH THE COVER HINGE ON TOPSIDE, CEILING MOUNTED WITH HINGE ON THE RIGHT SIDE FACING TOWARD SYSTEM CENTER (12TH AND G)

WASHINGTON METROPOLITAN AREA TRANSIT AUTHORITY
AS-BUILT DRAWING
BY ... RESIDENT ENGINEER DATE

DESIGNED	E. FEAK	8-26-68 DATE
DRAWN	EHL-DEH	9-5-68 DATE
CHECKED	W.R. Preece	10-14-68 DATE
APPROVED	[illegible]	10-14-68 DATE

REFERENCE DRAWINGS

NUMBER	DESCRIPTION

REVISIONS

DATE	BY	DESCRIPTION
12-18-68	T.P.	REVISED NOTE Nº 5 1
1-24-69	[illegible]	ADD FIXTURE MOUNTING 2
3-7-69	[illegible]	REV. DIMENSIONS & NOTE 5 3
10-7-71	[illegible]	REVISE MOUNTING STRAP DETAIL "C" 4
4-3-74	[illegible]	REV. PER STANDARD SPECIFICATION 5

WASHINGTON METROPOLITAN AREA TRANSIT AUTHORITY

APPROVED [illegible]

DE LEUW, CATHER & COMPANY
GENERAL ENGINEERING CONSULTANT

HARRY WEESE & ASSOCIATES
GENERAL ARCHITECTURAL CONSULTANT

APPROVED [illegible]

ELECTRICAL STANDARD DRAWING

TUNNEL LIGHT FIXTURE TYPES 4 AND 4A
SECTION Nº FAII

SCALE 1/2" = 1'-0" 0 1" 2" AND AS NOTED

DRAWING NO. ST-E-14

M334-220

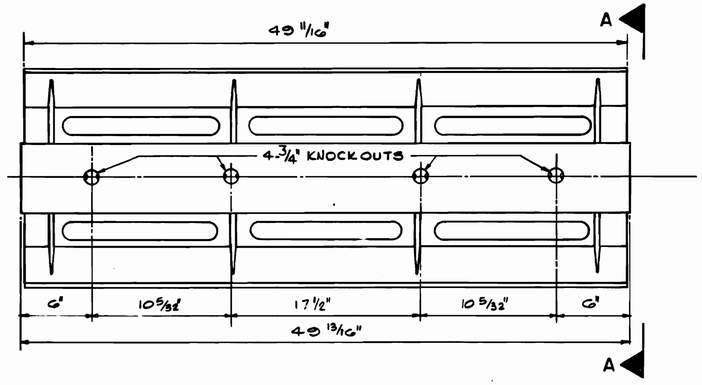

PLAN VIEW

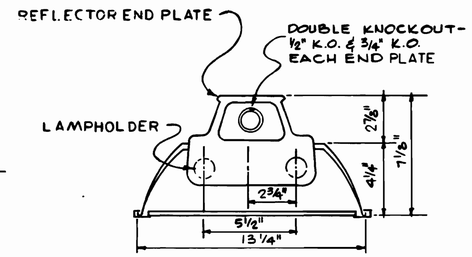

SECTION A-A

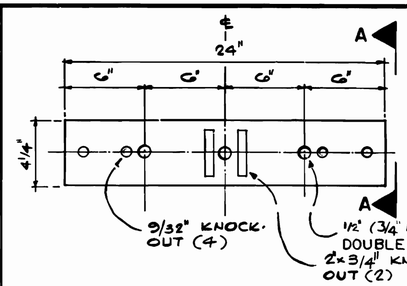

PLAN VIEW

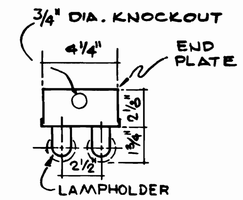

SECTION A-A

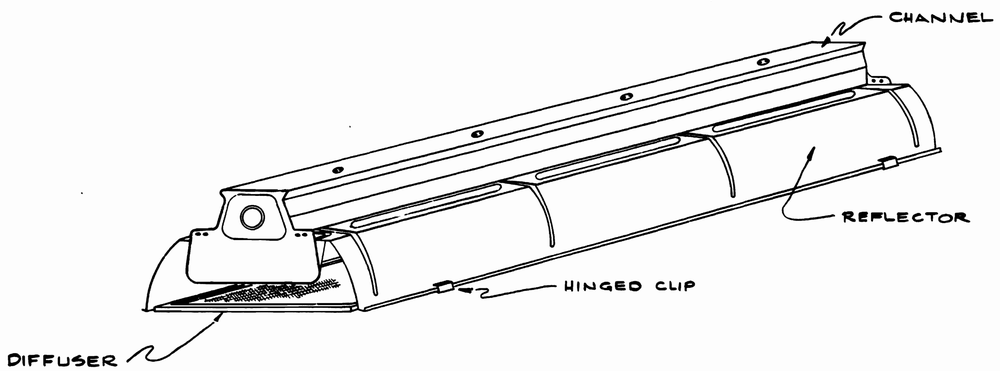

FIXTURE TYPE 1 WITHOUT DIFFUSER

FIXTURE TYPE 2 WITH DIFFUSER

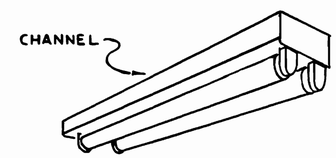

FIXTURE TYPE 3

FIXTURE TYPE 1

WITHOUT DIFFUSER

USE IN CLEANER'S ROOMS, MECH. EQUIPMENT ROOMS, WATER SERVICE ROOM, MAINTENANCE ROOM, OPERATIONS ROOM, TRAIN CONTROL AND COMMUNICATION ROOMS, A.C. SWITCHBOARD AND TRANSFORMER ROOM, BATTERY ROOM, D.C. BREAKER ROOM, TRACTION POWER SUBSTATION ROOM, TRAINMEN'S LOCKER ROOM, WASH ROOM AND BUS DRIVER'S WASH ROOM

FIXTURE TYPE 2

WITH DIFFUSER

USE IN STAFF WASH ROOMS, DISPATCH ROOM AND TRAINMEN'S ROOM.

FIXTURE TYPE 3

USE IN BELL SYSTEM ROOM, WHEN THIS ROOM IS TYPICAL NOMINAL 3'-0"x3'-0" SIZE. IF ROOM IS 60 SQ.FT. OR LARGER, USE FIXTURE 1.

SERVICE ROOM LIGHT FIXTURE

NOT TO SCALE

WASHINGTON METROPOLITAN AREA TRANSIT AUTHORITY
AS-BUILT
SEP 10 1982

DESIGNED	E. FEAK	12-13-68 DATE
DRAWN	PRYOR	12-13-68 DATE
CHECKED		DATE
APPROVED		12-16-68 DATE

REFERENCE DRAWINGS	
NUMBER	DESCRIPTION

REVISIONS		
DATE	BY	DESCRIPTION
4-5-74		REV. PER STANDARD SPECIFICATION 1

WASHINGTON METROPOLITAN AREA TRANSIT AUTHORITY

APPROVED BY

DE LEUW, CATHER & COMPANY
GENERAL ENGINEERING CONSULTANT

HARRY WEESE & ASSOCIATES
GENERAL ARCHITECTURAL CONSULTANT

APPROVED

STANDARD ELECTRICAL DRAWING
FLUORESCENT FIXTURES SERVICE ROOMS
SECTION № FA11

SCALE	DRAWING NO.	
NOT TO SCALE	ST-E-16	M334-221

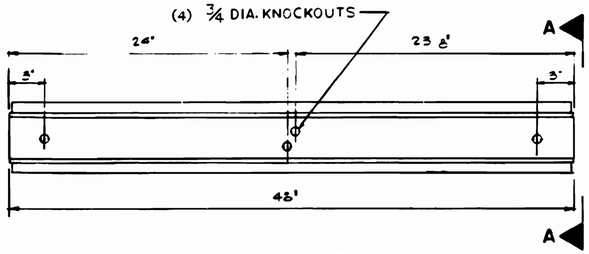

PLAN VIEW

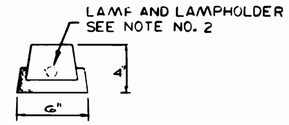

SECTION A-A

NOTE:
1. LOCATION – USE IN STAIRWELLS AND CORRIDORS OF ANCILLARY SPACES.

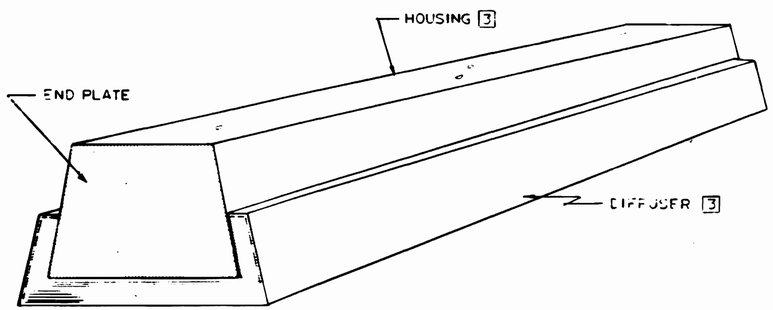

FIXTURE TYPE 5 WITH DIFFUSER

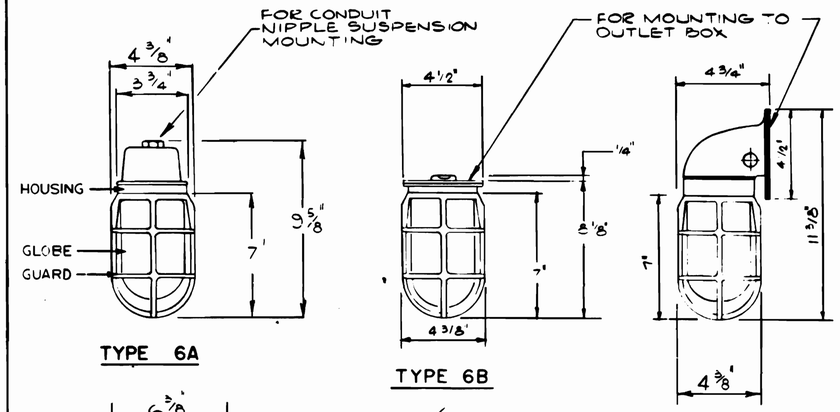

TYPE 6A

TYPE 6B

TYPE 6C

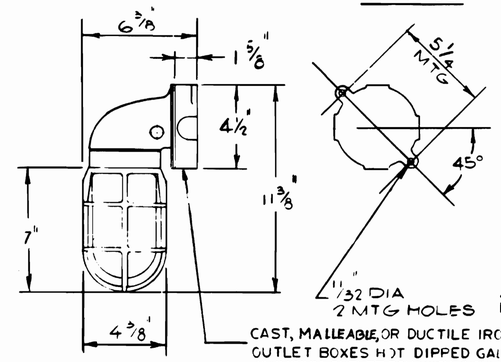

TYPE 6D 4 CAST, MALLEABLE, OR DUCTILE IRON OUTLET BOXES HOT DIPPED GALV. OR ALUMINUM OUTLET BOX WITH INSULATING GASKET BETWEEN ALUMINUM AND CONCRETE.

NOTES
1. LOCATION – SUBSTATION TRANSFORMER COURTYARDS, PUMPING STATIONS, ESCALATOR PITS, PIPE PASSAGES, VENT AND FAN SHAFTS.
3 2. FIXTURE EQUIPPED WITH ONE INCANDESCENT LAMP RATED 100W.

AS-BUILT COND
RESIDENT ENGINEER — DATE

DESIGNED	CROWE - LEVINE	2/24/69	DATE
DRAWN	PRYOR - LEVINE	2/26/69	DATE
CHECKED	W.R. Reese	2-28-69	DATE
APPROVED	[illegible]	2-28-69	DATE

REFERENCE DRAWINGS	
NUMBER	DESCRIPTION

REVISIONS		
DATE	BY	DESCRIPTION
8-26-69	[illegible]	ADD FIXTURE TYPE 7 1
4-9-71	[illegible]	REMOVED FIXTURE TYPE 7 2
4-3-74	[illegible]	REVISE PER STANDARD SPECIFICATION
		3
7-18-83	HTN	4 OUTLET BOXES FOR TYPE 6D LIGHT FIXTURES
		PER PCO- 40, AS BUILT

1 2

WASHINGTON METROPOLITAN AREA TRANSIT AUTHORITY

APPROVED BY [illegible] 3/20/69
[illegible] 3/20/69

DE LEUW, CATHER & COMPANY
GENERAL ENGINEERING CONSULTANT

HARRY WEESE & ASSOCIATES
GENERAL ARCHITECTURAL CONSULTANT

APPROVED [illegible]

STANDARD ELECTRICAL DRAWING
MISCELLANEOUS LIGHTING FIXTURES
SECTION Nº FAII

SCALE	DRAWING NO.	
NOT TO SCALE	ST-E-17	M334-222

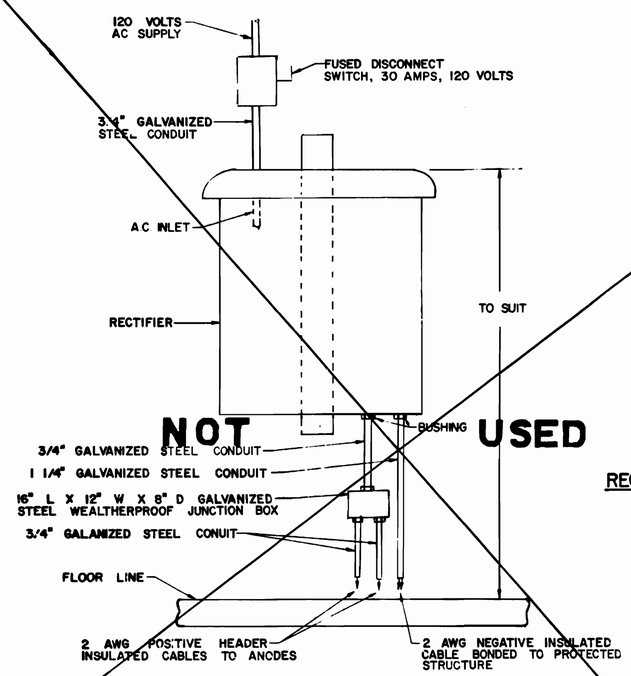

NOT USED

DETAIL 8
RECTIFIER INSTALLATION

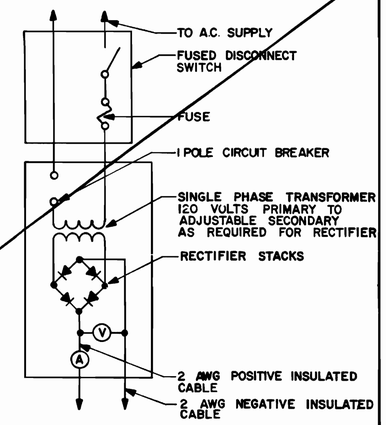

RECTIFIER SCHEMATIC

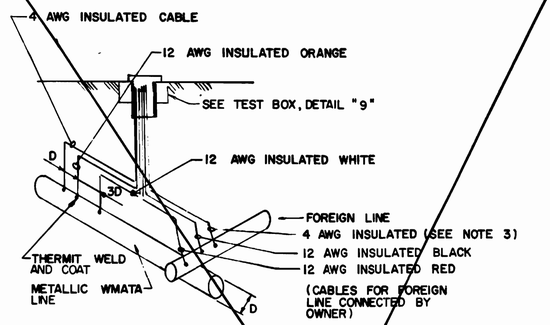

DETAIL 7
TEST STATION

NOT USED

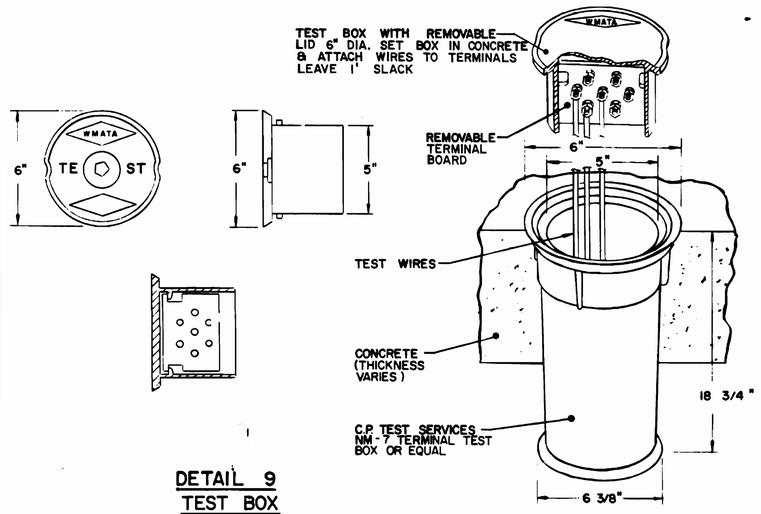

DETAIL 9
TEST BOX

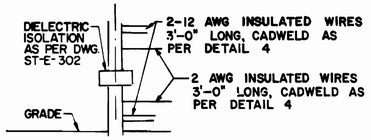

DETAIL 6
TEST LEAD INSTALLATION
AT INSULATED JOINT

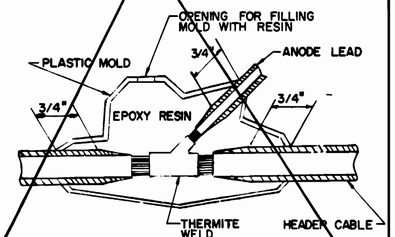

DETAIL 5
EPOXY INSULATED CABLE SPLICE

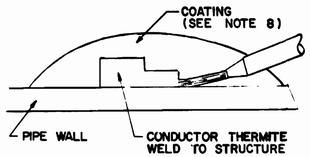

DETAIL 4
BOND TO PIPES

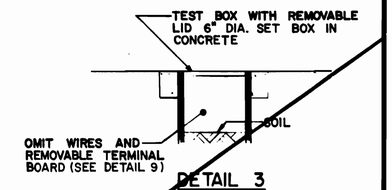

DETAIL 3
TEST ACCESS HOLE

GENERAL NOTES

1. NIPPLES TO BE WELDED TO FLANGES BEFORE ASSEMBLING INSULATING MATERIAL.
2. ENAMEL BOX TO BE BUILT OF CHEAP, UNFINISHED LUMBER. PLACE PIPELINE FELT PAPER AT JOINTS, FILL BOX WITH COAL TAR ENAMEL HEATED NOT OVER 150° F. WHEN INSULATING GASKET IS USED ON ONE FLANGE OF VALVE, BOX IS TO BE BUILT AROUND BODY OF VALVE.
3. TAG ALL WIRES AT TEST BOX TO IDENTIFY WHICH PIPE OR WHICH SIDE OF FLANGE THEY ARE WELDED ON.
4. FLANGE INSULATION AS PER DWG. ST-E-302.
5. MINIMUM OF 3" CLEARANCE BETWEEN FLANGE O.D. AND INSIDE OF BOX.
6. D = DIAMETER OF PIPE.
7. MAINTAIN SPACING AS SHOWN WHENEVER POSSIBLE. SEE ADDITIONAL CATHODIC PROTECTION DESIGN DRAWING.
8. CATHODICALLY PROTECTED WMATA METAL PIPES SHALL BE COAL TAR EPOXY COATED.
9. ANODES SHALL BE PACKAGED AS SHOWN IN DETAIL "2".
10. FOR ADDITIONAL DETAILS SEE DWG ST-E-302.

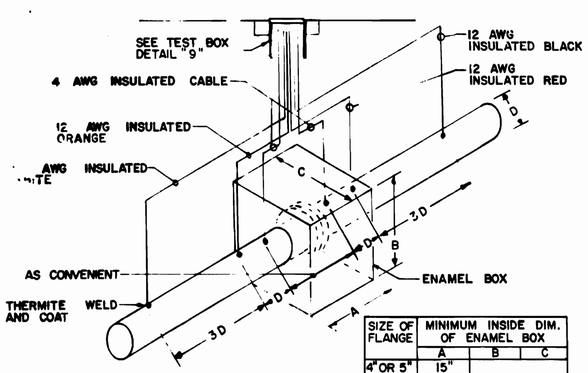

SIZE OF FLANGE	MINIMUM INSIDE DIM. OF ENAMEL BOX		
	A	B	C
4" OR 5"	15"	SEE NOTE 5	
6" OR 8"	24"		
10" OR 12"	24"		

DETAIL 1
ENAMEL BOX AND TEST BOX FOR UNDERGROUND INSULATING FLANGE

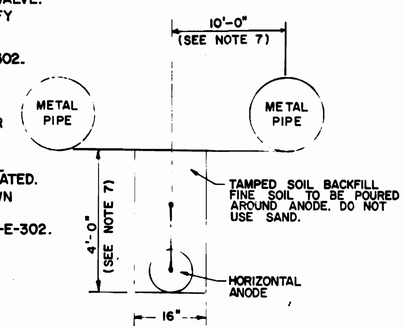

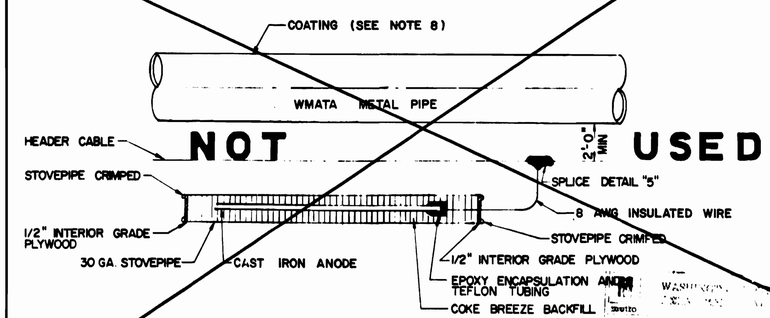

NOT USED

DETAIL 2
HORIZONTAL ANODE INSTALLATION

DESIGNED	P. HORT	1/22/72 DATE
DRAWN	P. HORT	1/22/72 DATE
CHECKED	[illegible]	[illegible] DATE
APPROVED	[illegible]	DATE

REFERENCE DRAWINGS		REVISIONS		
NUMBER	DESCRIPTION	DATE	BY	DESCRIPTION
ST-E-302	CATHODIC PROTECTION DETAILS	6/12/72	P.H.	REDRAWN - ADDED DETAILS 1, 2, 7 AND 9
				CHANGED DETAILS 3, 6 AND 8 [1]
		8/1/72	DWK	REVISED NOTES [2]
		11/1/74	" "	REVISED TO COMPLY WITH STD-SPECS [3]

WASHINGTON METROPOLITAN AREA TRANSIT AUTHORITY

WMATA
APPROVED [signature] DIRECTOR OF ENGINEERING
APPROVED [signature] 6/13/72 CHIEF OF ENGINEERING AND OPERATIONS

DE LEUW, CATHER & COMPANY
GENERAL ENGINEERING CONSULTANT ■

HARRY WEESE & ASSOCIATES
GENERAL ARCHITECTURAL CONSULTANT □

APPROVED [signature]

ELECTRICAL STANDARD DRAWING
CATHODIC PROTECTION DETAILS
SECTION NO. FAII

SCALE: NOT TO SCALE
DRAWING NO. ST-E-301
M334-223

NOTES:

1 INSULATING GASKET - J M 71. FULL FACE ASBESTOS OR EQUAL. ALL-TEMPERATURE 1 8" THICKNESS

2 INSULATING SLEEVES AND WASHERS:

A UP TO 300°F TEMPERATURE -
SLEEVE - MYLAR TUBE. 1 32" THICK
WASHER - PHENOLIC. 1 8" THICK

B ABOVE 300°F TEMPERATURE -
SLEEVE - KLINGERIT (WHITE COMP.) OR EQUAL
WASHER - J M 71 ASBESTOS OR TEFLON.

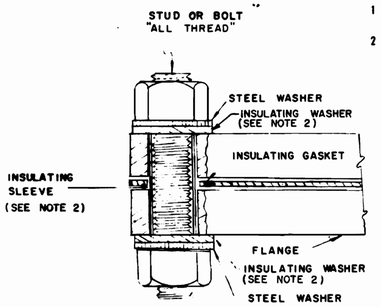

BOLT DETAIL

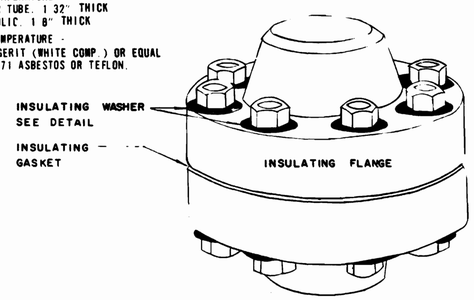

ASSEMBLY

INSULATED FLANGE AND BOLT CONNECTION DETAILS

DIELECTRIC ISOLATION

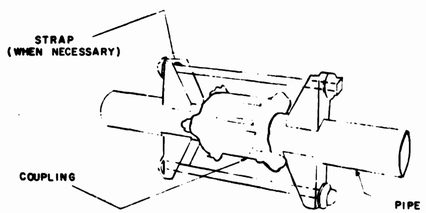

ASSEMBLY

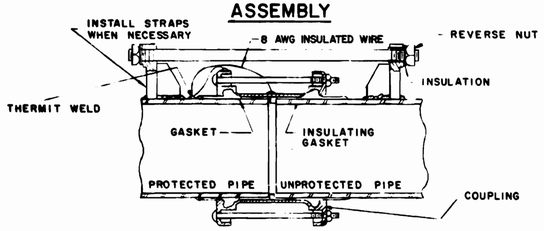

SECTION

COMPRESSION INSULATING COUPLING

FOR NORMAL TEMPERATURES (BELOW 150° F)

NOTES

3. INSULATED FITTINGS USED TO SEPARATE DIFFERENT TYPES OF PIPES. EXAMPLE - STEEL FROM COPPER

4. INSULATED FITTINGS SHALL BE USED TO SEPARATE WMATA PIPES FROM UTILITY SUPPLY

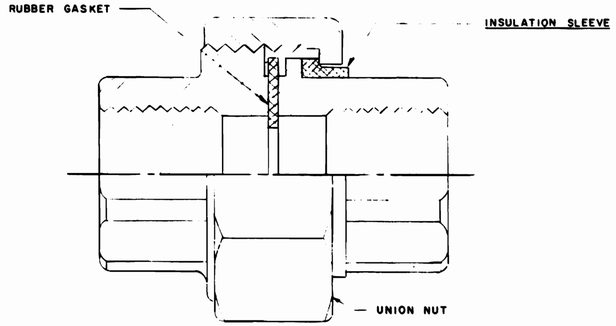

INSULATED UNION

DIELECTRIC ISOLATION ABOVE 150° F SPECIFY HIGH TEMPERTURE

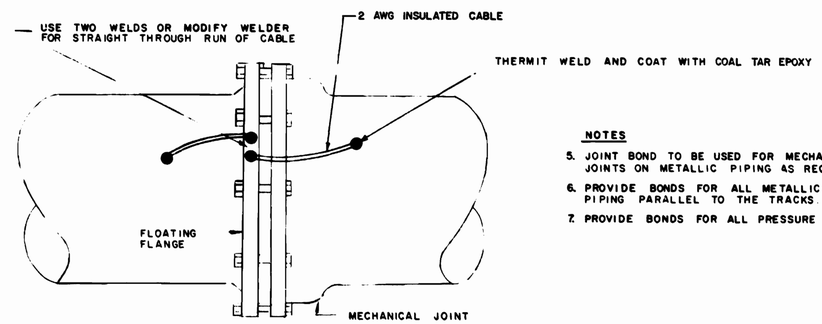

MECHANICAL JOINT BOND

REQUIRED FOR ALL BURIED METALLIC PIPES

NOTES

5. JOINT BOND TO BE USED FOR MECHANICAL JOINTS ON METALLIC PIPING AS REQUIRED.

6. PROVIDE BONDS FOR ALL METALLIC PIPING PARALLEL TO THE TRACKS.

7. PROVIDE BONDS FOR ALL PRESSURE PIPING.

WASHINGTON METROPOLITAN AREA TRANSIT AUTHORITY
AS BUILT CONDITION
BY: RESIDENT ENGINEER SEPTEMBER

DESIGNED DATE
DRAWN DATE
CHECKED DATE
APPROVED DATE

REFERENCE DRAWINGS		REVISIONS		
NUMBER	DESCRIPTION	DATE	BY	DESCRIPTION
ST-E-301	CATHODIC PROTECTION DETAILS	11/1/74		REVISIONS TO COMPLY WITH STD SPECS 1

WASHINGTON METROPOLITAN AREA TRANSIT AUTHORITY

WMATA
APPROVED DIRECTOR OF ENGINEERING
APPROVED CHIEF OF ENGINEERING AND OPERATIONS

DE LEUW, CATHER & COMPANY
GENERAL ENGINEERING CONSULTANT
THE HINCHMAN COMPANY
CORROSION CONTROL CONSULTANT
APPROVED

ELECTRICAL STANDARD DRAWING

CATHODIC PROTECTION DETAILS FOR WMATA UTILITY SYSTEMS SECTION NO. FAII

SCALE	DRAWING NO.	
NOT TO SCALE	ST-E-302	M334-224

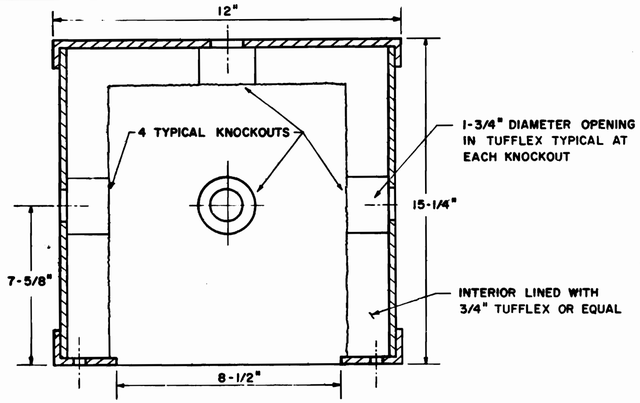

SECTION 'A-A'

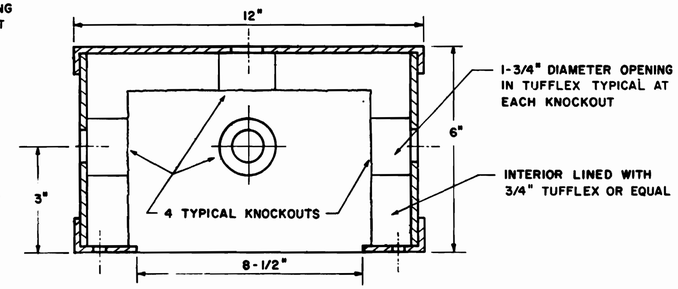

SECTION 'B-B'

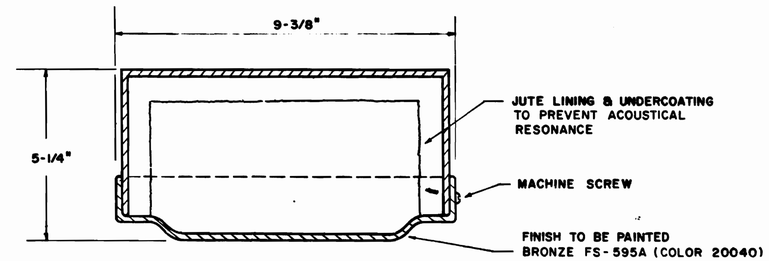

SECTION 'C-C'

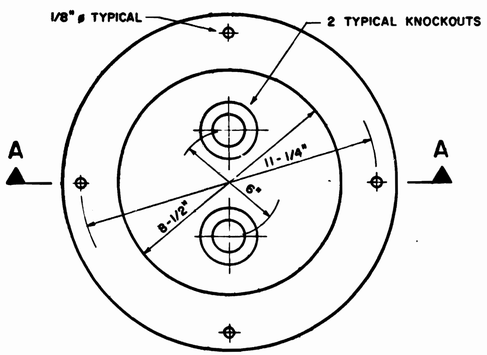

TYPE 'A' ENCLOSURE (EMBEDDED)

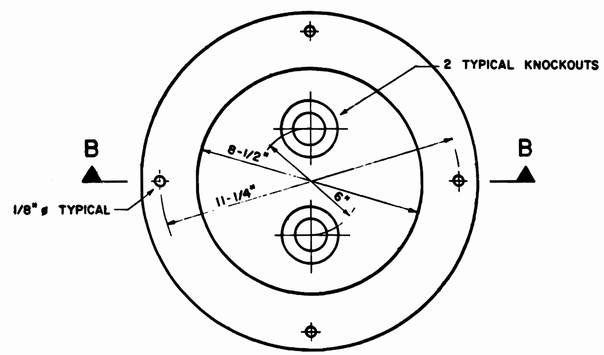

TYPE 'B' ENCLOSURE (EMBEDDED)

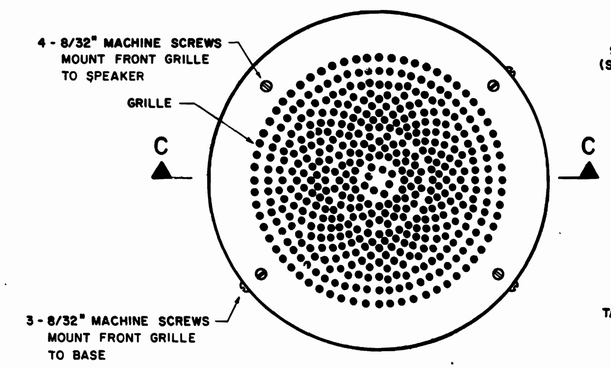

COVER

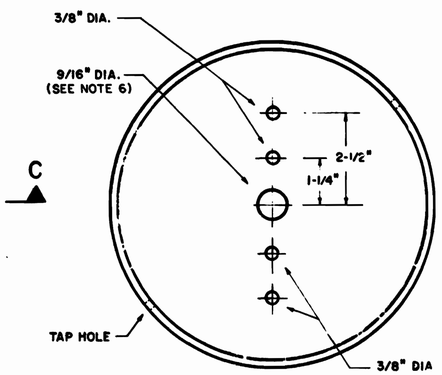

BASE

TYPE 'C' ENCLOSURE (SURFACE MOUNT)

NOTES

1. TYPE 'A' ENCLOSURE SHALL BE LOWELL MODEL NUMBER MWDC-8R OR EQUAL.
2. TYPE 'B' ENCLOSURE SHALL BE LOWELL MODEL NUMBER MWDC-8 OR EQUAL.
3. ADAPTER BOARD FOR MOUNTING SPEAKER SHALL BE PROVIDED BY THE COMMUNICATIONS CONTRACTOR.
4. TYPE 'C' ENCLOSURE SHALL BE USED ONLY WHEN DIRECTED BY THE G.E.C. AND THE G.A.C.
5. TYPE 'C' ENCLOSURE SHALL BE SOUNDOLIER MODEL NUMBER 410-8 OR EQUAL.
6. CONTRACTORS MAY MODIFY BASE IN THE FIELD TO ACCOMMODATE CONDUIT STUB-OUTS AS REQUIRED.

WASHINGTON METROPOLITAN AREA TRANSIT AUTHORITY
AS BUILT REVISION
BY RESIDENT ENGINEER SEP 19 1977

DESIGNED	M.D. POTILLO	11-1-71 DATE
DRAWN	P. BRANDENBERG	11-1-71 DATE
CHECKED		11/1/71 DATE
APPROVED		1-3-72 DATE

REFERENCE DRAWINGS

NUMBER	DESCRIPTION

REVISIONS

DATE	BY	DESCRIPTION
11/13/75		REDRAW & ADD TYPE 'C' ENCLOSURE 1

DISTRICT OF COLUMBIA — L.A. CATHWOOD — No. 5613 — REGISTERED PROFESSIONAL ENGINEER

WASHINGTON METROPOLITAN AREA TRANSIT AUTHORITY

WMATA APPROVED — DIRECTOR OF ENGINEERING

APPROVED — CHIEF OF ENGINEERING AND OPERATIONS 2/17/72

DE LEUW, CATHER & COMPANY — GENERAL ENGINEERING CONSULTANT

HARRY WEESE & ASSOCIATES — GENERAL ARCHITECTURAL CONSULTANT

APPROVED

TRAIN CONTROL STANDARD DRAWING

PASSENGER STATION PUBLIC ADDRESS SPEAKER ENCLOSURE DETAILS SECTION NO. FAII

SCALE	DRAWING NO	
NOT TO SCALE	ST-TC-3	M334-225